A Brain-Computer Interface for Recognizing Brain Activity

Arthur Salvetti †, and Bogdan M. Wilamowski ‡
† SVT Systems, Colorado Springs, USA
Electrical and Computer Engineering, Auburn University, Auburn, Alabama. USA
salvetti@salvetti.com, wilam@ieee.org

Abstract— **Electroencephalogram signals (EEG), also known as brainwaves, provide rich information about the brain processes, once that they result from the electrical activity of millions of neurons beneath the skull. By finding correlation between EEG patterns and certain brain processes, such as thought, it is possible to design an intelligent system that is able to translate the EEG information into computer commands. This research investigates this possibility by introducing the design of a portable EEG data acquisition system (to be connected to the printer parallel port of a PC computer) and developing a new neural network to classify signals.**

I. Introduction

The mammalian brain, and especially the human brain, is one of the most complex systems occurring in nature. In the human brain, most of the higher order processing neurons are concentrated in an area about only 2 mm thick known as the cerebral cortex. Due to its very highly convolved thin structure, it can cover an area of approximately 0.2 square meters when totally stretched. In fact, each square mm of human cortex contains about 100 thousand neuron units, which makes a total of about 20 billion neurons for the entire cortex area [1]. The pyramidal neuron is the most frequent cell found in the cortex. It is estimated that the cortex contains around 10 billion of these cells [2]. From work done by Moshe Abeles in 1991, we can use the estimate that a *typical* pyramidal cell receives as many as 40,000 synaptic connections [3]. Electroencephalogram (EEG) signals, also known as brainwaves, are small signal voltages generated on the surface of the scalp, due to the electrical activity of millions of neurons in the brain. These voltage signals are in the order of microvolts (0.1-100 μV) and have low frequency (bandwidth ranging from 0.01 to 100 Hz) [2]. They represent the temporal and spatial summation of electrical fields of many neurons.

By identifying characteristic features in the EEG signals, it is possible to correlate some specific brain activities with their characteristic brainwave patterns. An intelligent pattern recognition system could be used to classify these signals and translate them into computer commands. Based on these premises, a practical brain-computer interface would be feasible, allowing a new era for man-machine communication.

The main constraint in this problem is still the data analysis section. A proper design of an algorithm that would be able to interpret the EEG signals efficiently is a big challenge. The problem is complex in nature because:

- in EEG measurements, one is not collecting the activity of a single neuron, but rather a summation of signals produced by many neurons;
- the voltage potential contributions of each single neuron are also temporally summed;
- EEG signals are non-stationary[4];
- the biological media, composed by the brain tissue, fluids, skull and scalp form an inhomogenous media[5];
- the relevant signal information might be masked by the intrinsic interference due to the activity of millions of other neurons working for other brain processes;
- the pattern of signals related to a specific brain activity might not be the same at all times;
- each different person might have a different set of patterns, so that each intelligent pattern recognition system should be trained individually for each user;
- the EEG electrodes are not always replaced at the exact same skull locations each time the individual starts a new EEG recording session;

Besides all these difficulties, some systems were already able to achieve some form of rough control, based on EEG signals. They are mostly based on stipulation of thresholds for some EEG measurement parameters. When the human subject learns to control these parameters, he can achieve some sort of computer control. For example, there is a specific frequency of brainwaves called the alpha rhythm (10 Hz) that can be voluntarily induced by a person after some training. By controlling this alpha frequency a person can then send commands to a device. Systems like these have already been used in a therapy resource known as Biofeedback [6]. The big problem is that such systems demand a lot of training from the human subject, and they are not always reliable or efficient.

Recent advances in Integrated Circuit technology, Analog to Digital Conversion and the progressive miniaturization and cost reduction of personal computer systems, make it possible for the realization of a very compact and low cost EEG data acquisition system

II. EEG Fundamentals

Neurons are the basic units of the nervous system. Their basic cell structure can be seen on Fig. 1. The neuron membrane, as other biological cell membrane, forms a barrier between the interior and exterior of the cell. This barrier, and

1-4244-1543-8/08/$25.00 ©2008 IEEE

its selective permeability to ions, allows different concentrations of compounds to be established across internal and external cell environments.

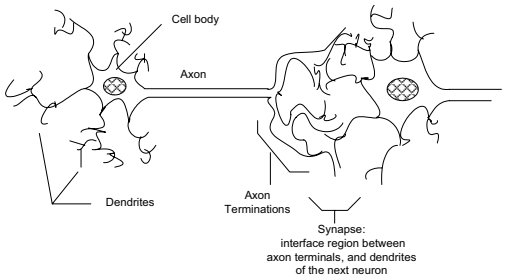

Fig. 1. A neuron cell basic structure

At the resting state, the internal concentration of the ion potassium is 20 times higher than its concentration outside the cell [7]. When a perturbation, either of chemical, electrical or mechanical nature, occurs at the membrane, the permeability channels change their properties and the permeability to sodium becomes higher than the permeability to potassium. If this depolarization voltage reaches a threshold, the sodium permeability suddenly increases (sodium channels open totally.) This phenomenon continues and it propagates as a domino chain to the rest of the membrane.

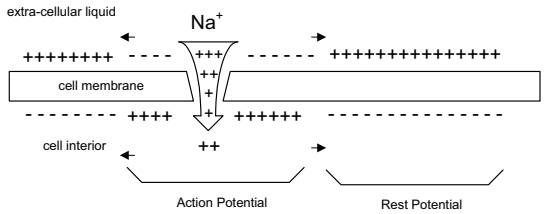

Fig. 2. Action potential

The propagation of the Action Potential is an active process, maintained at the expense of consumption of energy by the sodium-potassium pump. Neurons can have very long membrane extensions, in the form of a cylindrical and long cell expansion known as axon (Fig. 3). This structure allows the neuron information to be carried over distances, from cell to cell.

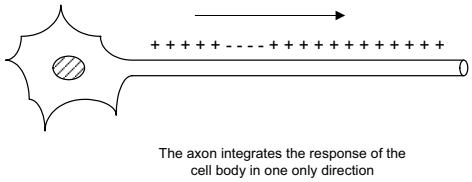

Fig.3. Neural axon

The axon action potential or spike is known as all-or-none because once it has started, it will propagate at the same amplitude for the entire membrane. It is also known as unidirectional because it usually originates at the cell body, and propagates towards the axon termination.

Neurons intercommunicate among them by establishing synapse interconnections. Depending on its characteristics, a synapse can attenuate or amplify a signal, by causing stimulating or inhibiting activation effects on the membrane of the following neuron. The most common way of transmitting information at the synapses is by the release of chemical mediators, also known as neurotransmitters, but other mechanisms also exist.

The flow of electrical charges in both extra-cellular and intra-cellular bathing liquids plays a very important role. While the membrane at rest shows an external positive potential, the excited membrane shows a negative external potential. This imbalance causes ionic charges to move within the extra and intra-cellular bathing liquids, originating solenoid (closed path) lines of plasmatic current. This charge separation creates electrical dipoles. This dipole phenomenon is more evident if it happens in two regions with large membrane surface (therefore containing large amount of charges) separated by a narrower cell expansion (Fig. 4.)

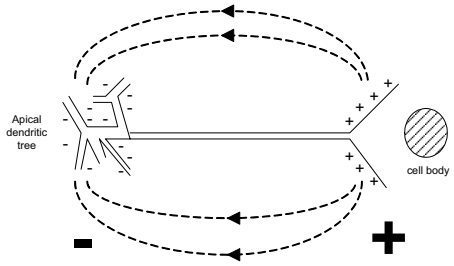

Fig. 4. A dipole model generated at the apical dendrite tree.

Research suggests that the main generators of voltages observed on the EEG are the dipoles represented by the partial depolarization of pyramidal neurons within the cortex, which are oriented in parallel like a palisade (Fig. 5). Several of these dipoles should coexist in time (synchronous responses), and the neurons that originate them should also be arranged in a spatial orientation that favors summation.

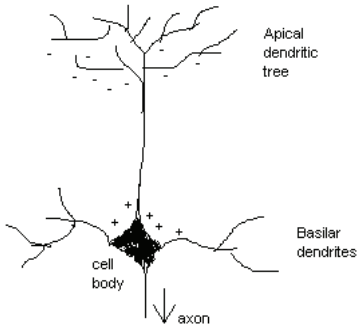

Fig. 5. A pyramidal cell and its dipole generated by a net excitatory input at the apical dendrites

Axonal currents contribute very little to the EEG signals observed on the scalp. Most of the EEG spectrum is contained within 1 to 50 Hz, which represents a period that ranges from 1 s to a minimum of 20 ms. Action potentials are fast phenomena, lasting only a few milliseconds. Therefore the resulting temporal and spatial distributions of axonal action potentials suggest that they are not highly correlated to the surface potentials.

One of the problems faced when trying to associate source locations with the distribution of electrical fields produced on the skull, is the presence of holes in the skull (eyes opening,

ear opening). The skull acts as an insulator. Its resistance is approximately 80 times larger than the brain tissue (see Table 1). As result long distance paths can have resistances comparable to the short path resistance across the skull bone.

TABLE 1 Media resistivities

Tissue	resistivity (ohm.cm)
CSF(cerebro-spinal-fluid)	64
Blood	150
Cortex	250
Skull	20,000

The EEG spectrum distribution shows some important differences that are correlated with the animal evolutionary scale. While invertebrates have frequency components uniformly distributed over a higher range (above 100Hz), vertebrates show slower frequency components (below 20Hz). Also, very interesting is the fact that although in most of the vertebrates the spectrum is generally flat over this low frequency range, humans, monkeys and dogs may show a peak at certain low frequency (for ex. 10Hz for the alpha rhythm). This causes the signal to have a sinusoidal or quasi-sinusoidal shape, while for the other cases it resembles random noise. Based on these observations, it has been speculated that there is a correlation between the presence of discrete low frequency components, and the increased complexity of the neural system. For mammals in general, although the EEG spectrum have a distribution between 0 and 100Hz, most of the important components are contained at a frequency range below 20 Hz.

TABLE 2. Categories of brain signals

gamma	30-60Hz
beta	14-30Hz
alpha	8-13Hz
theta	4-7Hz
delta	0.5-3Hz

Several rhythms of EEG have been classified based on its frequency bands (see Table 2). The alpha waves are synchronous waves with a frequency band between 8 and 13 Hz. They usually appear when the subject closes his/her eyes and goes into a relaxed state. They promptly disappear when the individual opens the eyes.

Theta waves have slow frequencies, between 4 and 7 Hz, and are usually associated with disappointment, and frustration. They can be induced by leading the person into a pleasant experience, and then suddenly removing the object of pleasure. Deep sleep is characterized by even slower wave patterns, called delta waves, with a frequency band between 0.5 and 3Hz.

Beta waves (14-30 Hz) and gamma waves (30-60Hz) have high frequency components, and are associated with intense mental activity, during tense alertness and concentrated thought. They represent the desynchronized activity of the neurons, when the resulting waves are smaller in amplitude and more irregular in shape. Fig. 7 shows some samples of EEG in several different states.

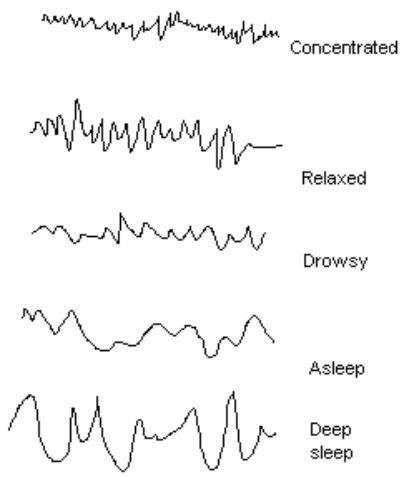

Fig. 6. EEG traces

It has been observed that attention and alertness are inversely related to the low frequency, synchronous signals. Generally when the degree of activity increases, the average frequency of the EEG also increases. At intense mental activity periods, the signal becomes asynchronous rather than synchronous, so that the signals resemble more like a random signal. This suggests that once attention is given, the neuron circuits start working independently from the synchronizing chief system.

Several artifacts are introduced with the EEG measurements (in the range 1uV to 100uV), somehow degrading its quality. These artifacts are generally produced by other concomitant sources of voltage signals present in the body, which effect cannot be isolated. Among them, there is the important influence of signals produced by the eye muscles. Eye movements as well as blinking can generate very high amplitude potentials that can mask the EEG signals. Electrical activity of the heart can produce electrical potential of several millivolts at the surface of the body, and it is known that they can propagate to the head, affecting EEG measurements. Other important sources of artifacts are the facial muscles, the jaw muscle (biting), the head neck muscles, body motion and small electrode displacements. Linked ear references have been proved to be very efficient in attenuating these kinds of signals.

III. Design of Electronic Hardware

In order to develop a brain-computer interface system, the data acquisition hardware has to be portable, and inexpensive. By using current integrated circuit technology, a portable unit becomes feasible [8].

In order to amplify such small voltages as the EEG signals (1-100μV) without loading the source, a high gain amplifier with very high input impedance and a very high CMRR - common mode rejection ratio has to be used. Because EEG signals can have amplitude as small as 1 μV, it is necessary that the noise generated by the amplifier be lower than this

value. Being a low noise amplifier, the AD620 again fulfills the requirements for this application: only 0.28 μV peak to peak voltage noise, and only 10 pA peak to peak current noise, within the range of 0.1 to 10 Hz.

The AD620 is also a low power device, requiring only 1.3 mA maximum supply current. It can also be operated at supply voltages as low as 2.3 V. These two specifications make this device very suitable for battery operated portable systems. The gain of the preamplifier was set to be 100V/V.

Considering maximum amplitude of 100μV for the input signals, and a maximum input range of 5V for the A/D converter, it can be concluded that a total amplification factor of 50,000 is necessary. The electrical diagram of the analog path is shown in Fig. 7 and digital diagram is shown in Fig. 8.

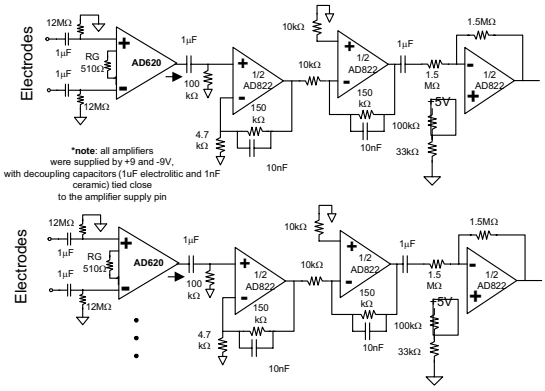

Fig. 7. Two out of eight channels of with 50,000 signal amplification factor.

In order to avoid the effects of half cell potentials (because the electrodes used were polarizable), AC coupling was used to connect the electrode leads to the inputs of the amplifiers Each electrode was connected in series to a respective DC blocking capacitor (1μF), and each input of the amplifier was connected to ground by means of a very high resistance (12MΩ) for input bias ground return. This RC network formed a one pole high pass filter, which corner frequency was set at 0.01 Hz.

For unipolar measurements, the reference electrode was connected at a common reference line that supplied the inverting inputs of all amplifiers. Each of the unipolar measurement electrodes was then connected to the its respective amplifier, through the non-inverting input. An extra electrode connection was used to link the system ground and the subject body (at the right arm wrist.) The principle behind this CMRR improvement, is that it makes the system ground to be referenced to the body. Therefore, the 60Hz, common mode noise signal captured by the body, swings in the same direction canceling each other.

In order to block residual DC components that can lead to saturation of the next stages, the pre-amplifier was AC coupled to the second amplifier. The DC blocking filter was composed by a blocking capacitor and a resistance. This RC network had a corner frequency set at 0.16 Hz.

The remaining of the gain was divided between two stages, which used the AD822 Operational Amplifier. The second stage was assigned with a gain of 33, and the third stage was set to produce a final gain of 15. Combined with the first stage gain (100), this resulted in a global gain of 49,500.

The second stage had the configuration of a non-inverting amplifier. A capacitance was present at the feedback of the amplifier in order to limit the frequency response. The capacitor and resistor combination at the feedback formed a single pole low pass filter, with a corner frequency set at 106 Hz.

The third stage was an inverting amplifier that provided another single pole filtering stage. It also had a low pass response set at 106 Hz. Its output was then fed to the following block by means of a high pass filter (RC), whose corner frequency was set at 0.1 Hz.

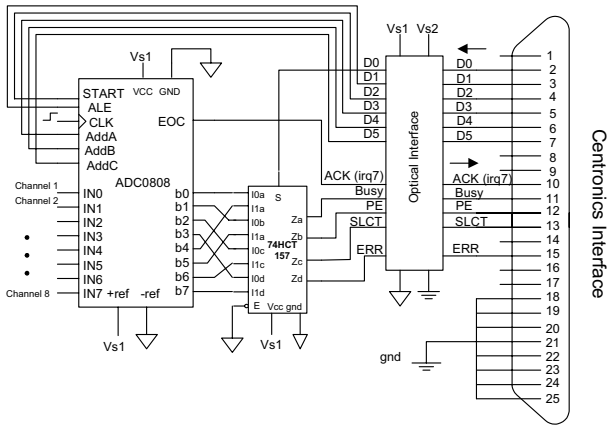

Fig. 8. Diagram of digital interface for laptop computer

An 8-bit, 8-channel A/D converter was used for the data acquisition. The device employed was the ADC0808 from National Semiconductors. By properly changing the address of the decoder that controls the multiplexer, different channels can be selected.

By having a typical conversion time of 50 μs when a 1 Mhz clock signal is employed, a sampling rate of up to 20 kHz can be obtained. Because the EEG signals are usually measured at a 250 Hz sampling frequency (1 kHz at the most), its conversion speed is more than enough for this application.

After a conversion was done, a EOC signal was generated by the device. This rising edge signal was used to activate the IRQ7 interrupt line (by connecting it to the ACK bit).

The Centronic parallel port was configured to operate in the standard mode. Because only five input bits were available as an input for the standard printer parallel port (and from which one was already used to generate the interrupts), it was necessary to multiplex the 8-bit data resulting from the conversion results, into two 4-bit blocks.

IV. Experimental Data

Two different sets of data were obtained. First, performance of the system was determined by generating some experimental signals for SNR and distortion analysis purposes. Different waveforms were used in order to evaluate noise as well as distortion effects. Then, experimental EEG data was obtained from five human subjects, while performing two distinct mental tasks. The sampling rate used was 400

samples/sec, and each recording lasted 10 seconds (total of 4000 samples.)

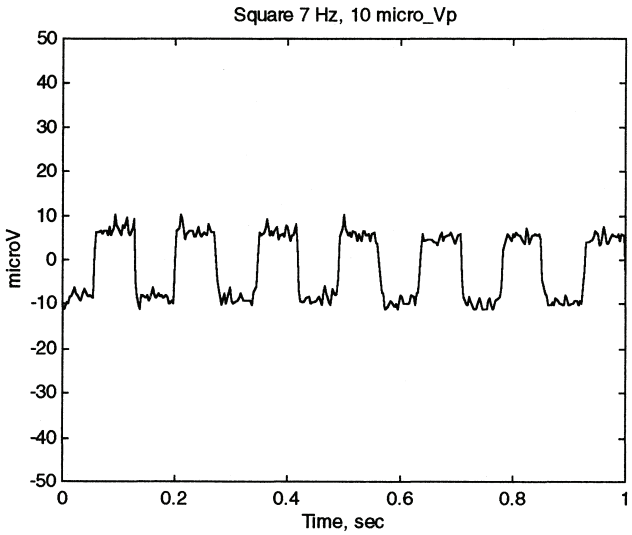

Fig. 9. Output signal divided by 50,000 for ±10uV square waveform input excitation

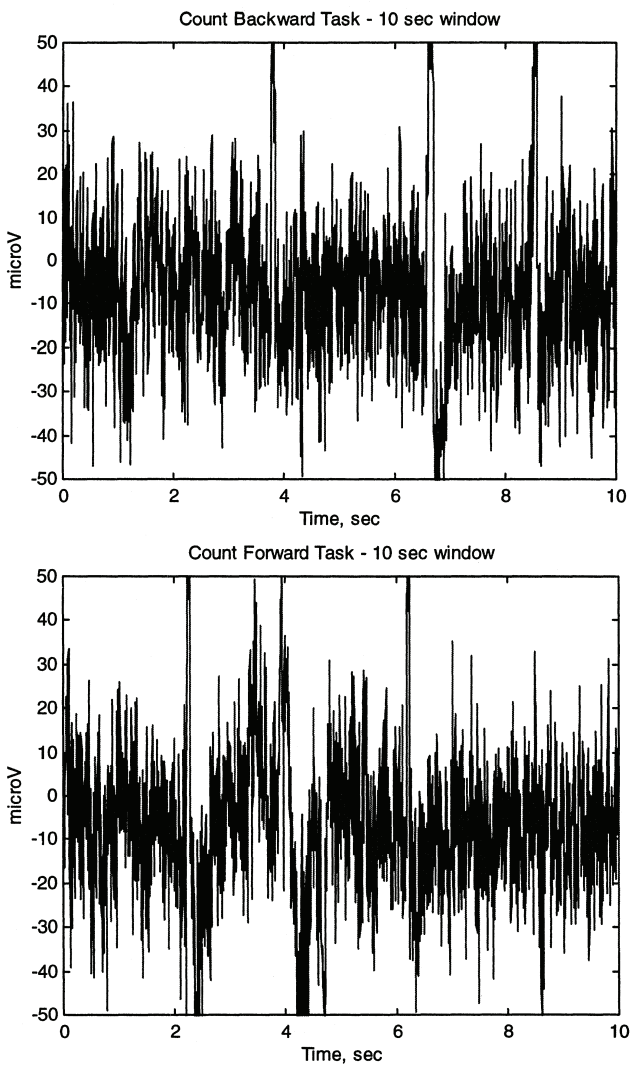

Fig10. Sample of ECG signals for 10s recording

In order to investigate the Signal-to-Noise Ratio (SNR) and distortion effects, a sine, triangular and square wave (50% duty cycle) were experimentally generated in the lab, using a signal generator and an attenuator. The amplitude and frequency changed over a range of 1, 10, 50 μV, and 1, 10, and 100Hz. Fig. 9 shows the output from the system, when ±10uV square waveform with the period of 0.15ms was applied to the input. The visible signal noise is less than 0.5uV RMS and it is partially generated the resistor divider used in the test generator.

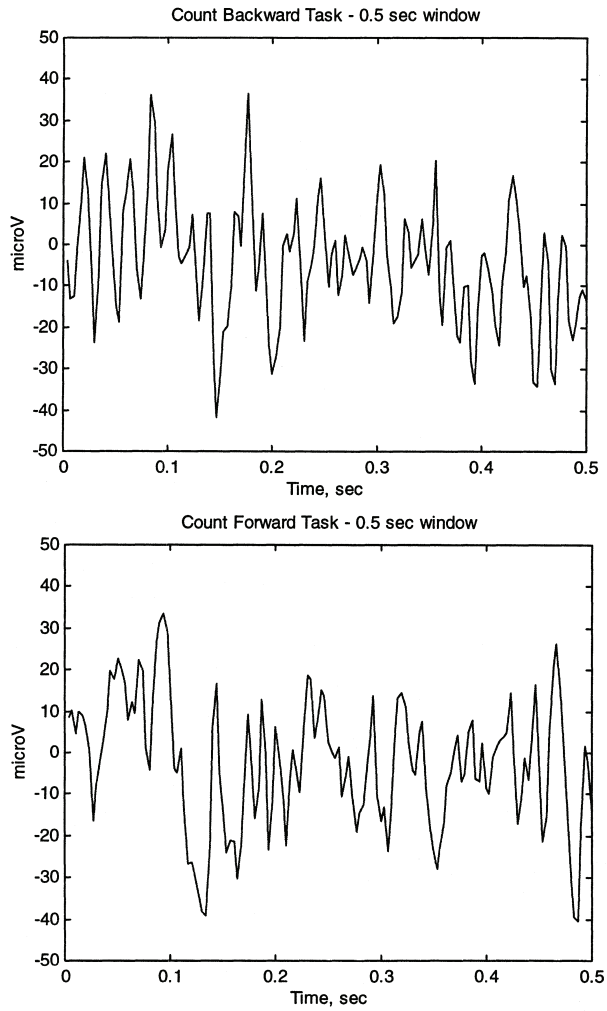

Fig. 11. Sample of ECG signals for 0.5s recording

Experimental data was obtained from five human subjects. They were asked to perform two distinct tasks: to count forward and to count backwards. The counting was done mentally (therefore without vocalization), with the eyes open. Counting forward was initiated at 1, advancing in unitary increments, like 1,2,3,4,5....Counting backwards was initiated at 1000, being decremented by steps of 3, like 1000, 997, 994, 991.... The recordings were obtained in silent and medium illuminated environment in 3 different trials spaced by at least 1 week. Each trial consisted of five recordings for the

counting forward task, and another five recordings for the counting backwards task (taken alternatively). Therefore, a total of 30 recordings were obtained for each subject. Each recording had a length of 10 seconds.

Three experimental recordings were taken at three different days for every subject. Samples of these recordings are shown in Fig. 10 and Fig. 11. By visual inspection of waveforms on Fig. 10 one may conclude that there is no easy distinction in brain waveforms between these two tasks. When time scale was expanded (Fig. 11) some minor differences could be noticed.

Four different data analysis tools were employed on the raw data, in an attempt to extract some qualitative features associated to each mental task. Theses tools were: Spectral Estimate (using the Averaged Welch's periodogram), Autocorrelation, Average Zero-crossing and Cepstrum. The reported plots are selected ones, obtained from one of the human subjects. Most noticeable differences were observed in the autocorrelation analysis (Fig. 12).

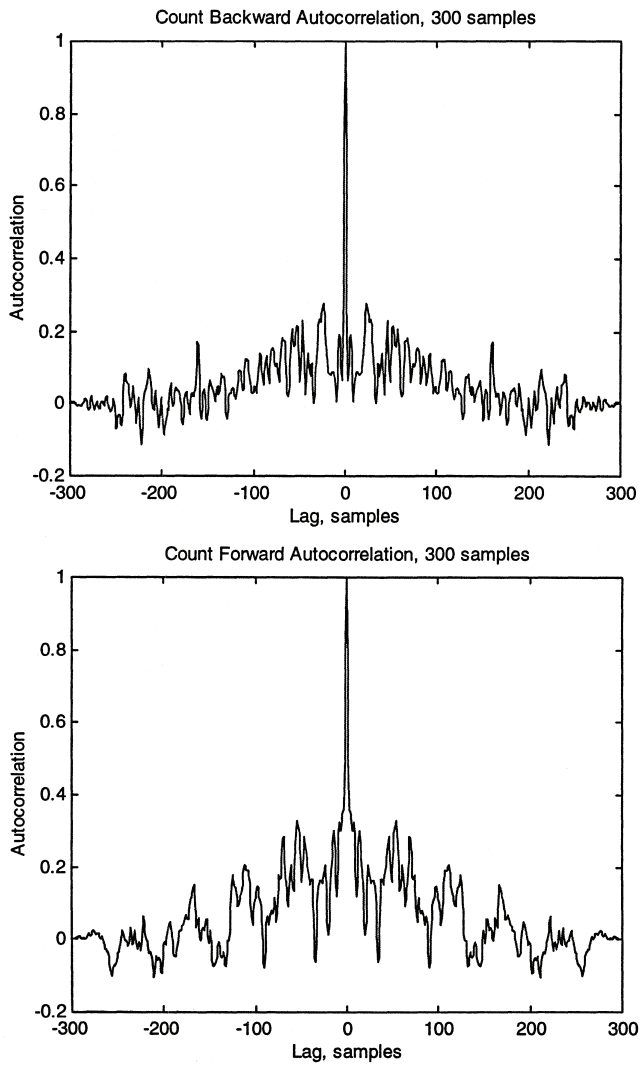

Fig. 12. Results of the autocorrelation analysis from 0 to 300 lag times between individual samples.

V. Conclusion

The brain-computer interface that uses EEG signals promises to be a powerful way of human-machine interaction. The main advantage of such a system would be the parallel transfer of information between the brain and the machine.

Although EEG signals are very low in amplitude (μV range) and therefore very susceptible to noise, it has been shown that the data acquisition of these signals can be efficiently accomplished by a portable system. By making use of current electronics technology, a reliable system could be implemented.

The use of some form of artificial intelligence at this interface is very important. This is because the relevant information contained in the EEG signals is not very well defined, and it may be masked by noise generated by other irrelevant neuron signals, as well as artifacts. As a result it becomes very difficult to apply traditional signal processing techniques for extracting the information. A suitable signal processing system should be intelligent enough to extract the hidden information, to accept variations of the input wave patterns and still produce correct classification. It should also be able to tolerate some amount of artifacts and other forms of noise.

Using an intelligent system at the interface allows the machine to adapt to the human, instead of the opposite. This saves a lot of effort from the user, and provides a faster and more reliable way of achieving a form of brain-computer communication.

Higher sophistication on the intelligent data processing algorithms, such as artificial neural networks, will be able to provide higher resolution and accuracy of response. Such a system would allow direct communication with the brain, instead of indirect use of the body sense organs as well as the muscles, allowing a true sense expansion of the mind.

.

VI. References

[1] Williams, Robert W., Karl Herrup. "The Control of Neuron Number." *Annual Review Neuroscience* 1988. 11:423-453.

[2] Clark, W. John. "The Origin of Biopotentials." *Medical Instrumentation*. Houghton Mifflin Company, Boston 1978 pg. 184-205.

[3] Berger, Hans. "Uber das Elektrenkephalogramm das Menchen." *Archiv fur Psychiatrie* 87, 527-579 1929.

[4] Williams, W.J., Brown M., Zaveri,H.,Shevrin, H. "Feature Extraction From Time- Frequency Distributions." *Intelligent Engineering Systems Through Artificial Neural Networks vol.4 ASME Press New York 1994* pp689-695.

[5] Nunez, Paul L. *Electric Fields of the Brain.* Oxford University Press 1981.

[6] Hatch, J.P., Fisher, J. G., Rugh, J. D. *Biofeedback: Studies in Clinical Efficacy* New York: Plenum.

[7] Hodgkin, A.L., Kartz B."*The effect of the sodium ions on the electrical activity of the giant axon of the squid."* Journal of Phisiology. London 1949 108:37-77.

[8] Arthur Salvetti, "A Brain-Computer Interface Using Artificial Neural Networks," Department of Electrical Engineering, University of Wyoming, August 1997.