Exclusive Test and its Applications to Fault Diagnosis

Vishwani D. Agrawal*
Agere Systems
4 Connell Drive
Berkeley Heights, NJ 07922
vishwani02@yahoo.com

Dong Hyun Baik, Yong Chang Kim and Kewal K. Saluja
University of Wisconsin-Madison
Dept. of Electrical and Computer Eng.
Madison, WI 53706
{*dbaik, kimy, saluja*}*@ece.wisc.edu*

Abstract

We introduce a new type of test, called **exclusive test**, and discuss its application to fault diagnosis in combinational circuits. A test that detects exactly one fault from a given pair of faults is called an exclusive test. In general, generation of an exclusive test by a conventional automatic test generator requires a model of the circuit with multiple-faults. We describe an ATPG model that transforms the exclusive test problem into a single-fault test generation problem. We present a generalized diagnostic method and illustrate the use of exclusive tests in improving the diagnostic resolution of a test set. Results of diagnosis with exclusive tests for ISCAS85 benchmark circuits are included.

1 Introduction

Most diagnostic procedures are based on single-fault tests. As a result, the "symptom" or "signature" produced by an actual defects often does not map onto the output calculated by a single-fault simulator. Nevertheless, the *single-fault dictionary* approach [5, 6, 13] is frequently used. The resolution of a diagnostic procedure can be improved if we could find tests for group of faults constructed from the suspected fault set identified by the single-fault tests. We can also benefit from tests that "exclusively" detect one fault, but not the others, in the suspected fault set.

In this paper, we define **exclusive test**, present a method of generating it and give its application to diagnosis. In Section 2, we provide a model for exclusive test generation and fault simulation. An example is included to illustrate the use of exclusive test to improve the diagnostic resolution of a fault dictionary. In Section 3, we present a generalized algorithm for fault diagnosis using exclusive tests. To demonstrate how exclusive tests help improve the *diagnostic resolution* of a combinational circuit, we include diagnostic results of the proposed method for ISCAS85 circuits in Section 4.

*Visiting Professor, Dept. of ECE, Rutgers University, Piscataway, New Jersey.

2 Exclusive Test

An "Exclusive test" is an input vector that detects only one from a pair of targeted faults [1]. The general exclusive test problem can be formulated for a pair of fault sets. For simplicity, however, we will study it for a pair of faults, f_1 and f_2. An exclusive test must detect exactly one of these faults. Figure 1 illustrates generation of an *exclusive test*. A fault-free digital circuit is shown as C_0. The other blocks C_1 and C_2 are the same circuit with faults f_1 and f_2, respectively. The circuit is assumed to be combinational and can have any number of inputs. For clarity, we will only consider single output functions. Any input vector that produces a 1 output in Figure 1(a) is an exclusive test for the pair of faults f_1 and f_2. This is the *Boolean satisfiability* version of the test generation problem, which can be solved by using two-valued (0,1) or three-valued (0,1,X) signals. The Boolean satisfiability formulation of the exclusive test problem is,

$$(C_0 \oplus C_1) \oplus (C_0 \oplus C_2) = 1 \tag{1}$$

which simplifies to,

$$C_1 \oplus C_2 = 1 \tag{2}$$

and may also be expressed as,

$$(C_0 \oplus C_0) \oplus (C_1 \oplus C_2) = 1 \tag{3}$$

Equation 2 is a condition for distinguishing between the two faults. The complementary condition, $C_1 \oplus C_2 = 0$, is known as the *indistinguishability condition* [5], and when satisfied by all inputs makes the two faults equivalent. Equation 3 indicates that an exclusive test is a test for a double fault in two copies of the circuit under test producing a single output through an exclusive-OR gate, and each copy contains a different single fault. We make the following observations:

- If no exclusive test exists for two faults then either they are equivalent or both faults are redundant. Although not often recognized, all redundant faults of a combinational circuit form an equivalent fault set.

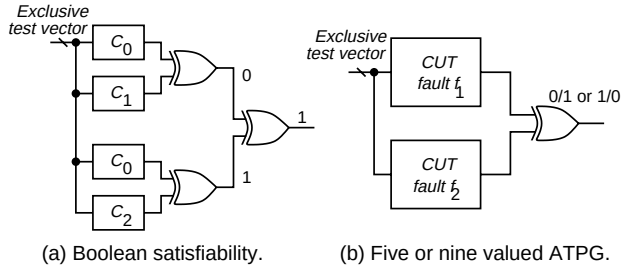

Figure 1: Generation of exclusive test.

Table 1: Fault dictionary enhancement by exclusive test for the circuit of Figure 2.

100% coverage tests		Exclusive test added	
Test syndrome	Mapped faults	Test syndrome	Diag. fault
0000001	c_1	0000001000	c_1
0000011	b_0, e_1, i_1, k_1	**0000011000**	$\mathbf{b_0}$
0000100	n_1	0000011100	e_1
0001000	b_1, h_1, m_1	0000100000	n_1
0010000	l_1	0001000000	b_1
0011000	i_0	0001000001	m_1
0110100	a_0	0001000010	h_1
0111100	z_0	0010000010	l_1
1000000	d_1, g_1	0011000011	i_0
1000011	a_1, z_1	0110100010	a_0
		0111100011	z_0
		1000000000	$\mathbf{d_1}$
		1000011100	$\mathbf{a_1}$
0000000	$\mathbf{f_1}, j_1$	0000000000	$\mathbf{f_1}$

- If two faults are independent then any test that detects either one of them is an exclusive test for the pair. Two faults are defined as *independent* [2] if no vector can detect both of them.

2.1 Application

We illustrate the use of exclusive test in the generation of a diagnostic fault dictionary [5] through an example. Consider the circuit shown in Figure 2. Seven tests, $T_1 = 0000$, $T_2 = 1100$, $T_3 = 1000$, $T_4 = 0011$, $T_5 = 1111$, $T_6 = 0111$ and $T_7 = 0101$, were generated by an ATPG program [7].

We obtain a total of 19 faults via structural equivalent fault collapsing, namely, (a_0, a_1, b_0, b_1, c_1, d_1, e_1, f_1, g_1, h_1, i_0, i_1, j_1, k_1, l_1, m_1, n_1, z_0, z_1) where the subscripts denote the stuck-at values. The fault dictionary is given in Table 1. For the seven tests, each fault has a syndrome that is a seven-bit vector [5]. The jth bit t_j of this vector is 1 if test T_j detects that fault. Two faults, f_1, j_1, are redundant and are not detected by the seven tests. These redundant faults always have all-0 syndromes regardless of applied tests. The second column shows the mapped faults exhibiting the syndromes shown in the first column. Thus, the fault b_0 (b s-a-0), detected by T_6 and T_7, has a test syndrome 0000011. Three other faults, e_1, i_1 and k_1, also have the same test syndrome as b_0 and those are not distinguishable by the given tests. Additional test(s) are required to resolve this ambiguity. This can be achieved by using

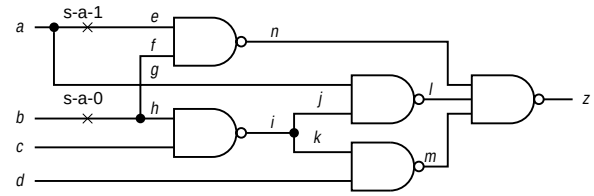

Figure 2: An example for diagnostic tests.

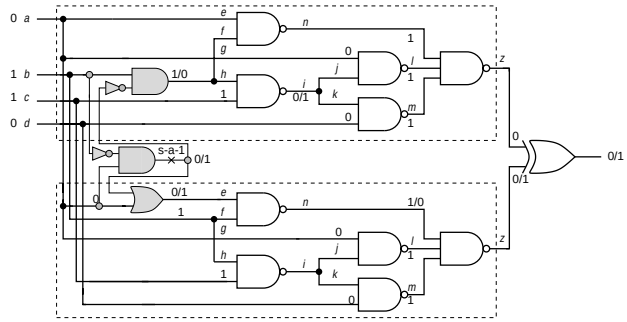

Figure 3: Exclusive test for the fault pair (b_0, e_1).

exclusive tests for these faults. Figure 3 shows exclusive test generation for the fault pair (b_0, e_1). This previosly proposed model [9] allows detection of multiple faults by a single-fault ATPG [7], which generates the vector $T_8 = 0110$. The vector, which distinguishes between faults b_0 and e_1, is appended to the existing vector set and the fault dictionary is updated. Two additional tests, $T_9 = 1010$ and $T_{10} = 1001$, which distinguish between faults of pairs (b_1, h_1) and (b_1, m_1), respectively, are also appended. However, there is no test for fault pairs (a_1, z_1), (i_1, k_1), (b_0, i_1), (b_0, k_1) and (d_1, g_1) indicating these pairs are equivalent pairs. These equivalent fault pairs form three equivalent fault classes $\{\mathbf{a_1}, z_1\}$, $\{\mathbf{b_0}, i_1, k_1\}$ and $\{\mathbf{d_1}, g_1\}$. Since a fault in the equivalent fault class cannot be distinguished from other faults in the same equivalent class, we list only one fault (shown in boldface) to represent each equivalent class. The resulting test syndromes and diagnosed faults are shown in the last two columns of Table 1. Now every fault in the list can be *diagnosed* and the faults representing equivalent fault classes are shown in bold face. Only two fault pairs out of three pairs, (i_1, k_1), (b_0, i_1), (b_0, k_1), are required to be tested to establish equivalence of all three faults. Also, it should be noted that redundant fault f_1 also represents redundant fault set which has all-0 syndrome.

3 Fault Diagnosis

Equivalence fault classes. Any given set of faults can be divided into subsets of equivalent faults. All equivalent faults produce identical circuit behavior at all primary outputs that are observed during test [5]. These fault subsets are called *equivalent fault classes* or simply *equivalent classes*. They have the following properties:

- A fault can belong to exactly *one* equivalent class.

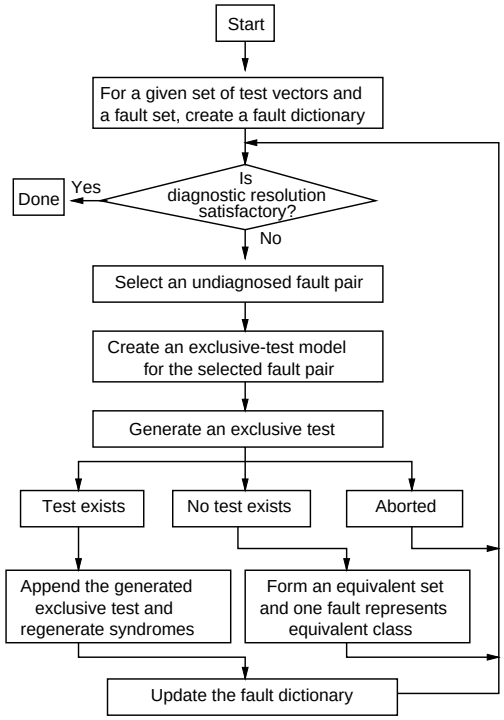

Figure 4: Diagnosis with exclusive tests.

- All redundant faults belong to the same equivalence class, which also includes the fault-free circuit or the "no fault" condition.
- Faults in the same equivalence class cannot be distinguished from each other by any test set.

Diagnosis. A perfect diagnosis refers to the highest resolution, i.e., identification of a single suspect (or equivalence class.) A diagnosis procedure may consider only one fault from each equivalence class or all faults which belong to the equivalence class from the given fault set. The complete list of faults in the suspected equivalence class is more comprehensive and may be more useful for the purpose of repair.

Given a test set and a set of faults, each fault has a test syndrome or its decimal equivalent, diagnostic number [1]. We observe:

- A fault with a unique syndrome that differs from the syndrome of all other faults is classified as "uniquely diagnosed" or simply "diagnosed". A set of faults with the same syndrome forms an "undiagnosed fault set," which is further analyzed.
- Faults with all-0 syndrome are either redundant or not detectable by the *given* test set. However, the faults proven to be redundant fall into a diagnosed equivalent fault class. Otherwise, their redundant status is not known. This set of faults also forms an undiagnosed fault set and is analyzed further.
- Faults from an undiagnosed fault set can belong to either the same equivalence class (i.e., are indistinguishable) or different equivalence fault classes but not distinguished due to the inadequacy of the test set. Exclusive tests are generated for pairs of faults those have identical syndrome. This pairwise strategy is based on the property of fault equivalence, which is frequently used for finding the equivalence classes [12]. Suppose that we have an undiagnosed fault set with $k > 1$ faults. We choose a pair of faults and attempt to generate an exclusive test. We have the following cases.

1. If an exclusive is found for a pair of faults, the test is augmented and simulated to reclassify the fault set. As a result, an undiagnosed fault set now splits into two sets, each guaranteed to contain fewer then k faults.
2. If no exclusive test exists, then the two faults belong to the same equivalence class. In this case, any one of this pair can represent the equivalence fault class and the number of faults in the set becomes $k - 1$.

The number of faults in undiagnosed set, k, is guaranteed to be reduced in both cases and undiagnosed set will eventually be fully diagnosed when k becomes 1. However, exclusive test generation could be aborted due to backtrack limit or time constraint. In this particular case, the aborted pair will be excluded from further exclusive test generation.

We introduce an important measures called *diagnostic resolution* (DR) to quantify the quality of the diagnosis. DR is defined as follow:

$$DR = \frac{number\ of\ faults}{number\ of\ syndromes}$$

DR gives an average number of faults per fault class (or syndrome). The equivalences of faults is unknown before the exclusive generation. Thus we assume that all faults can be uniquely diagnosable and each fault is counted once. During the diagnostic test generation, we reduce the number of faults as we discover more equivalent fault sets. A perfect DR of 1.0 is achieved if all equivalent fault classes are identified (each equivalent class is represented by one fault).

For the example in Section 2.1, the initial DR is 1.55 since there are a total of 17 faults and 11 different syndromes (7 diagnosed fault classes including redundant fault class and 4 undiagnosed fault sets). After the exclusive tests, the DR becomes 1.00; there are total of 14 faults and 10 uniquely diagnosed faults and 4 diagnosed equivalent faults including redundant fault class.

Figure 4 shows a generalized diagnosis procedure using exclusive tests. For a given test set, we construct the fault dictionary using the definitions above. Depending on the test and the fault set, we may possibly have two different types of fault sets: diagnosed fault sets (may be uniquely diagnosed fault or diagnosed equivalent fault sets including the redundant fault set) and undiagnosed fault sets(two or more faults have same

syndromes). If the diagnostic resolution is not satisfactory, we select a pair of faults to be diagnosed from an undiagnosed fault set. We generate an exclusive test model, generate a test and update the fault dictionary using the guidelines above. If the exclusive test exists, we simulate the generated test and regroup faults to update fault dictionary. We repeat *fault pair select*, *exclusive fault test generation*, and *fault dictionary update* steps until a desired DR is obtained.

Major limitations of dictionary based diagnosis methods are that they require intensive computing and substantial storage space. However, our diagnosis methods can also be used for *adaptive diagnosis* as follows. First, obtain as much diagnosis information as possible using initial test set. During the actual diagnosis, we can start diagnosis using obtained information. If a fault is uniquely identified, we can terminatethe diagnosis procedure. However, if the fault is found to be an element of undiagnosed fault set then we can resolve this ambiguity by using our proposed method.

4 Results

We have presented a detailed flow chart (4) for the fault diagnosis procedure in Section 3. A typical diagnosis procedure starts with a test set (also called a *detection test set* or *detection tests*) and a list of faults. In general, only those faults detected by the detection tests or the subset of detected faults are identified and included for diagnosis. However, we excluded redundant faults and aborted faults from diagnosis due to the fact that a set of redundant faults are already diagnosed as one equivalent fault set, and aborted faults are generally aborted again for generation of exclusive test. Since no diagnostic method can distinguish between structurally equivalent faults, we identify structurally equivalent faults and consider only one representative fault from each structurally equivalent fault set. For these reasons, we start with structurally collapsed fault set and consider only the detected faults for diagnosis.

Since our exclusive test generation model is defined for a single output circuit, we converted ISCAS85 benchmark circuits to single output circuits by adding an "xor tree", a network of Exclusive-Or (xor) gates, to their outputs. A similar technique called "parity-scan design" was used to compact [8] the outputs of scan-registers to minimize scan-in and scan-out effort. *For the subsequent discussion, we use * to denote a modified circuit with a single output xor tree at its outputs.*

It should be noted that an exclusive test for the modified single output circuit is also an exclusive test for the original multiple output circuit. However, the converse is not true since there may exist exclusive tests for multiple output circuits which are not the exclusive tests for single output circuit due to masking caused by xor-tree.

For each modified ISCAS85 benchmark circuit, we use a combinational ATPG to generate fault detection tests for faults in the original multiple output circuit (faults in the *xor tree* are not considered) and all detected faults are to be diagnosed. We then proceed with the diagnosis phase using exclusive test method. Table 2 summarizes the results of our diagnosis and these are explained below.

First row lists the names of the ISCAS85 circuits used in our study for fault diagnosis. The remaining table is divided into three separate blocks. Each column contains the results for each modeled ISCAS85 benchmark circuit and circuits. The first block, listed under the heading *Detection tests*, contains initial test generation results and the corresponding statistics. In this block the *Number of detection tests* is the number of test vectors generated by the combinational ATPG that are to be used as the initial test set for diagnosis. The remaining six rows in this block summarize the statistics of this test set. *Number of eq. collapsed faults* are the number of structural equivalent excluding faults in the xor tree. *Number of redundant faults* are the number of faults identified redundant (untestable) in the modified circuits.In all cases the backtrack limit was not set to be very high to mimic the realistic environment in which status of some faults remains aborted during the test generation phase.

The second block in the Table 2, listed under the heading *Diagnosis with detection tests*, shows the results of initial fault dictionary construction using only the detection tests. *Number of faults* is the number of faults to be diagnosed, which is same as the *Number of detected faults* from the first block. *Number of syndromes* is the number of distinct syndromes obtained by the detection tests. *Number of diagnosed faults* is the number of faults which have unique syndromes, thus uniquely diagnosed by the detection tests. *Diagnostic resolution* gives an average number of faults per syndrome and *Maximum faults per syndrome* gives a maximum number of faults associated with a syndrome. These two parameters quantify the effectiveness of our diagnosis since DR indicates how well faults are distributed among all syndromes and the *Maximum faults per syndrome* indicate the worse distribution among all syndromes. For the computation of DRs, we assume all detected faults are uniquely diagnosable and each fault is counted once since we have no information regarding fault equivalence at this stage of diagnosis.

The third block, under the heading *Diagnosis with detection and exclusive tests*, shows the results and statistics of the fault dictionary after generation of exclusive tests. The first five rows have similar meaning to the second block, except for *Number of diagnosed faults* now contains *diagnosed* equivalent fault sets. As can be seen from the table, DRs and *Maximum faults per syndrome* are generally improved for most of the circuits. *Total test vectors* are obtained by adding the number of generated exclusive test vectors and the detection tests. The fault pairs that were found to be equivalent are listed in the row *Number of equivalent pairs found*. Since we did not change the default backtrack limit, the

Table 2: Diagnostic results : ISCAS85 circuits

Circuit names	c17*	c432*	c499*	c880*	c1355*	c1908*	c2670*	c3540*
Detection tests								
Number of detection tests	6	82	58	104	104	176	236	239
Number of eq. collapsed faults	22	524	758	942	1574	1879	2747	3428
Number of redundant faults	0	4	0	5	0	4	84	90
Number of aborted faults	0	0	32	2	32	27	884	81
Number of detected faults	22	520	726	935	1542	1848	1779	3257
Fault coverage	100.00%	99.24%	95.78%	99.26%	97.97%	98.35%	64.76%	95.01%
Fault efficiency	100.00%	100.00%	95.78%	99.79%	97.97%	98.56%	66.8%	97.57%
Diagnosis with detection tests								
Number of faults	22	520	726	935	1542	1848	1779	3257
Number of syndromes	14	426	691	789	873	1450	1285	2706
Number of diagnosed faults	9	354	661	686	360	1121	972	2351
Diagnostic resolution	1.57	1.22	1.05	1.19	1.77	1.27	1.38	1.20
Maximum faults per syndrome	4	5	4	6	11	8	11	12
Diagnosis with detection and exclusive tests								
Number of faults	22	520	726	935	1542	1848	1779	3256
Number of syndromes	22	506	710	870	902	1579	1385	2844
Number of diagnosed faults	22	492	694	808	366	1331	1097	2559
Diagnostic resolution	1	1.03	1.02	1.07	1.71	1.17	1.28	1.14
Maximum faults per syndrome	1	2	2	3	3	8	11	8
Total test vectors	11	126	72	152	129	262	293	328
Number of exclusive tests	5	44	14	48	25	86	57	89
Number of equivalent pairs found	0	0	0	0	0	0	0	1
Number of aborted pairs	0	14	16	79	744	321	630	662

Table 3: Diagnostic results for C432.

Circuit names	c432*	c432	c432
Detection tests			
Number of detection tests	82	82	82
Number of eq. collapsed faults	524	524	524
Number of redundant faults	4	4	4
Number of aborted faults	0	0	0
Number of detected faults	520	520	520
Fault coverage(%)	99.2	99.2	99.2
Fault efficiency(%)	100	100	100
Diagnosis with detection tests			
Number of faults	520	520	520
Number of syndromes	428	495	500
Number of diagnosed faults	354	471	479
Diagnostic resolution	1.22	1.05	1.04
Maximum faults per syndrome	5	5	4
Diagnosis with detection and exclusive tests			
Number of faults	506	*507*	507
Number of syndromes	506	507	507
Number of diagnosed faults	492	494	494
Diagnostic resolution	1.00	*1.00*	1.00
Maximum faults per syndrome	1	1	1
Total test vectors	131	131	123
Number of exclusive tests	49	49	41
Number of equivalent pair found	14	*13*	13
Number of aborted pair	0	0	0

ATPG aborted many exclusive test generations and this value is listed under *Number of aborted pairs*. Only in one case (circuit c3540) a fault pair was identified to be equivalent. This fact is reflected in the computation of diagnostic resolution.

4.1 Fault Equivalences

Traditional diagnosis methods [3, 10, 11, 14, 15, 16] rely only on the fault simulation to create fault dictionary. For this approach, the quality of diagnosis is limited by the supplied test sets. Often, some faults cannot be diagnosed by the supplied test set when there exist some other test sets that can diagnose those faults. Other limitation of simulation-only based diagnosis methods is that there is no available method to prove if some faults are equivalent (cannot be distinguished) with respect to *all* tests; it can only establish some faults are equivalent with respect to the *given* test set. In [4], Amyeen et al expanded the method of identification of fault equivalence based on fault implication of the faulty values and functional evaluation at the *dominator* gate, where all the effects of the fault must be propagated through to reach outputs. This method offered an improved fault equivalence identification. However, it has two major limitations namely requires a special tool and it can not identify all equivalent fault classes. Our proposed method is different from previous methods since the proposed method can identify all faults equivalences using only the conventional tools.

However, we need to substantially increase the backtrack limit as well as the test generation time for generation of a test in order to determine fault equivalences for all undiagnosed faults. We set out an objective of perfect DR (=1) for the circuit c432*. The results of this study are given in Table 3. All aborted fault pairs in Table 2 are now identified as 14 diagnosed equivalent fault sets and each of which have two faults per set. Consequently, number of fault to be diagnosed is reduced to 506 since 14 out of 28 faults represent each equivalent fault class. Note that in this case the appended vectors are different than those generated in Table 2.

For simplicity, we have shown the exclusive test generation model for single output circuits. The proposed exclusive test generation model can be extended to a circuit with multiple outputs by *XORing* each pair of outputs (one from the CUT with fault f_1 and the corresponding output from the CUT with fault f_2 in Figure 1

(b)). An exclusive test model of the multiple output circuit is less restrictive than that of an XOR-modified single output model; the multiple output models provide more outputs for propagating and observing the fault effects than the single output models. Thus, any test set which derived to diagnosing a single output circuit is guaranteed to diagnose all corresponding faults in multiple output circuit. Similarly, when a pair of faults are found to be equivalent in the multiple output circuit, same pair of faults in the single output modified circuit is guaranteed to be equivalent. We can use these relationships to find the appropriate diagnostic method for multiple output circuits. When a diagnostic test set, derived using a single output modified circuit, applied to the multiple output circuit, the number of fault pairs requiring tests for the equivalence relations is equal or less than that of single output modified circuit.

The second data column of Table 3 shows the results of applying the diagnostic test set generated for c432* (c432 modified by adding an xor tree) to diagnose unmodified c432. When the test set (total of 131 vectors) is applied to c432, only 13 fault pairs (total 26 faults) are required exclusive test generations to establish their equivalences. Notice that one additional fault is distinguishable in c432 than c432*.

The third data column of Table 3 shows the results of applying our proposed diagnosed method directly on c432 (without using the test set derived for single output modified circuit). The new diagnostic test set using the c432 resulted in same number of faults (507), syndromes (507), diagnosed faults and DR (1.00) when compared to the results from second data columns. The only difference is a slight reduction in total diagnostic test set (123 versus 131 vectors) due to a increased observability through multiple outputs.

5 Conclusion

In this paper, we defined new type of test, *exclusive test*, and modeling method to allow conventional ATPG to generate exclusive test. We also presented a comprehensive diagnosis procedure using exclusive test to improve fault diagnosis. Our results for ISCAS85 benchmark circuits indicate that we can achieve very high diagnostic resolutions using our method.

Exclusive test based diagnosis method is different from the traditional approaches since we use both fault simulation and test generation for fault diagnosis. Our use of exclusive test guarantees that all faults can be diagnosed and all equivalent fault sets can be identified regardless of given test sets. With our exclusive test diagnosis method, we derive additional tests required for the diagnosis when the supplied test set fails to diagnose all faults.

References

[1] V. D. Agrawal and K. K. Saluja, "Antitest, Exclusive Test, and Concurrent Test." Unpublished manuscript, see URL, http://www.ece.wisc.edu/∼va, Dec. 2001.

[2] S. B. Akers, C. Joseph, and B. Krishnamurthy, "On the Role of Independent Fault Sets in the Generation of Minimal Test Sets," in *Proc. International Test Conf.*, 1987, pp. 1100–1107.

[3] H. Al-Asaad and J. P. Hayes, "Logic Design Validation via Simulation and Automatic Test Pattern Generation," *J. Electronic Testing: Theory and Applications*, vol. 16, no. 6, pp. 575–589, Dec. 2000.

[4] M. E. Amyeen, W. K. Fuchs, I. Pomeranz, and V. Boppana, "Implication and Evaluation Techniques for Proving Fault Equivalence," in *Proc. 17th IEEE VLSI Test Symp.*, 1999, pp. 201–207.

[5] M. L. Bushnell and V. D. Agrawal, *Esentials of Electronic Testing for Digital, Memory and Mixed-Signal VLSI Circuits.* Boston: Kluwer Academic Publisher, 2000.

[6] H. Y. Chang, E. G. Manning, and G. Metze, *Fault Diagnosis of Digital Systems.* New York: Wiley-Interscience, 1970.

[7] W.-T. Cheng and T. J. Chakraborty, "Gentest: An Automatic Test Generation System for Sequential Circuits," *Computer*, vol. 22, no. 4, pp. 43–49, Apr. 1989.

[8] H. Fujiwara and A. Yamamoto, "Parity-Scan Design to Reduce the Cost of Test Application," in *Proc. International Test Conf.*, 1992, pp. 283–292.

[9] Y. C. Kim, V. D. Agrawal, and K. K. Saluja, "Multiple Faults: Modeling, Simulation and Test," in *Proc. 15th International Conf. VLSI Design*, Jan. 2002, pp. 592–597.

[10] E. M.Rudnick, W. K. Fuchs, and J. H. Patel, "Diagnostic Fault Simulation of Sequential Circuits," in *Proc. International Test Conf.*, Sept. 1992, pp. 178–186.

[11] I. Pomeranz and S. M. Reddy, "Location of Stuck-at Faults and Bridging Faults Based on Circuit Partitioning," *IEEE Trans. on Computers*, vol. 47, pp. 1124–1135, Oct. 1998.

[12] A. V. S. S. Prasad, V. D. Agrawal, and M. V. Atre, "A New Algorithm for Global Fault Collapsing into Equivalence and Dominance Cells," in *Proc. International Test Conf.*, Oct. 2002.

[13] W. R. Simpson and J. W. Sheppard, *System Test and Diagnosis.* Boston: Kluwer Academic Publishers, 1994.

[14] N. Sridhar and M. S. Hsiao, "On Efficient Error Diagnosis of Digital Circuits," in *Proc. International Test Conf.*, 2001, pp. 678–687.

[15] H. Takahashi, K. O. Boateng, K. K. Saluja, and Y. Takamatsu, "On Diagnosing Multiple Stuck-at Faults Using Multiple and Single Fault Simulation in Combinational Circuits," *IEEE Trans. on Computer-Aided Design of Integrated Circuits and Systems*, vol. 21, no. 3, pp. 362–368, March 2002.

[16] S. Venkataraman and S. B. Drummonds, "Poirot: Applications of a Logic Fault Diagnosis Tool," *IEEE Design & Test of Computers*, vol. 3, pp. 19–30, Jan. 2001.