Non-Linear Analog Circuit Test and Diagnosis under Process Variation using V-Transform Coefficients

Suraj Sindia Vishwani D. Agrawal
Dept. of ECE, Auburn University, AL, USA

Virendra Singh
Indian Institute of Science, Bangalore, India

May 2, 2011

Outline

Outline

Fault Classification

Motivation

1. Semiconductor processes at advanced nodes are subject to random variability
   - Poly/thin film resistors - line edge roughness ($\sigma \approx 15\%\mu$)
   - Capacitors - Oxide thickness fluctuation & line edge roughness ($\sigma \approx 20\%\mu$)

Fault Classification

Motivation

1. Semiconductor processes at advanced nodes are subject to random variability
   - Poly/thin film resistors - line edge roughness ($\sigma \approx 15\%\mu$)
   - Capacitors - Oxide thickness fluctuation & line edge roughness ($\sigma \approx 20\%\mu$)
2. Faults due to variability can mask or exacerbate failure from conventional defect mechanisms.
   - Dust contamination, Processing Equipment, Material impurity, Clean room contamination, Operator imperfection, etc., (Fault sizes $\mu_{dev} > 50\%$)

Fault Classification

Motivation

1. Semiconductor processes at advanced nodes are subject to random variability
   - Poly/thin film resistors - line edge roughness ($\sigma \approx 15\%\mu$)
   - Capacitors - Oxide thickness fluctuation & line edge roughness ($\sigma \approx 20\%\mu$)
2. Faults due to variability can mask or exacerbate failure from conventional defect mechanisms.
   - Dust contamination, Processing Equipment, Material impurity, Clean room contamination, Operator imperfection, etc., (Fault sizes $\mu_{dev} > 50\%$)
3. Distinguishing failure mechanisms between process variation (PV) and conventional ones can possibly help improve yield.

Types Of Faults

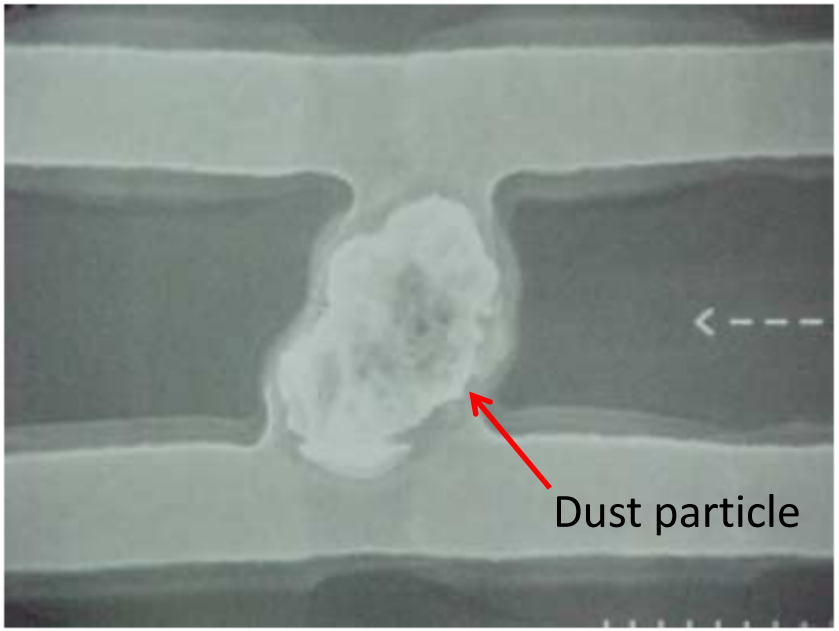

Manufacturing Defect

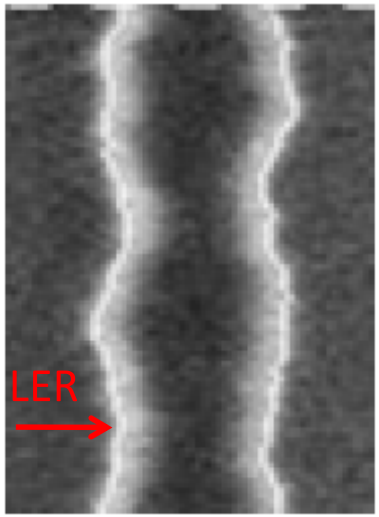

Random Variation

Ideal Test For An Analog Circuit

Wish list for an analog circuit test scheme

- Suitable for large class of circuits
- Detects sufficiently small parametric faults – high sensitivity
- Low design complexity of the input signal
- Small area overhead – requires little circuit augmentation
- Large number observables – handy in diagnosis

Ideal Test For An Analog Circuit

Wish list for an analog circuit test scheme

- Suitable for large class of circuits
- Detects sufficiently small parametric faults – high sensitivity
- Low design complexity of the input signal
- Small area overhead – requires little circuit augmentation
- Large number observables – handy in diagnosis
- Aids distinction of small defects from process variation (PV) induced faults – need in advanced tech nodes

Outline

Cascaded Amplifiers – An Example

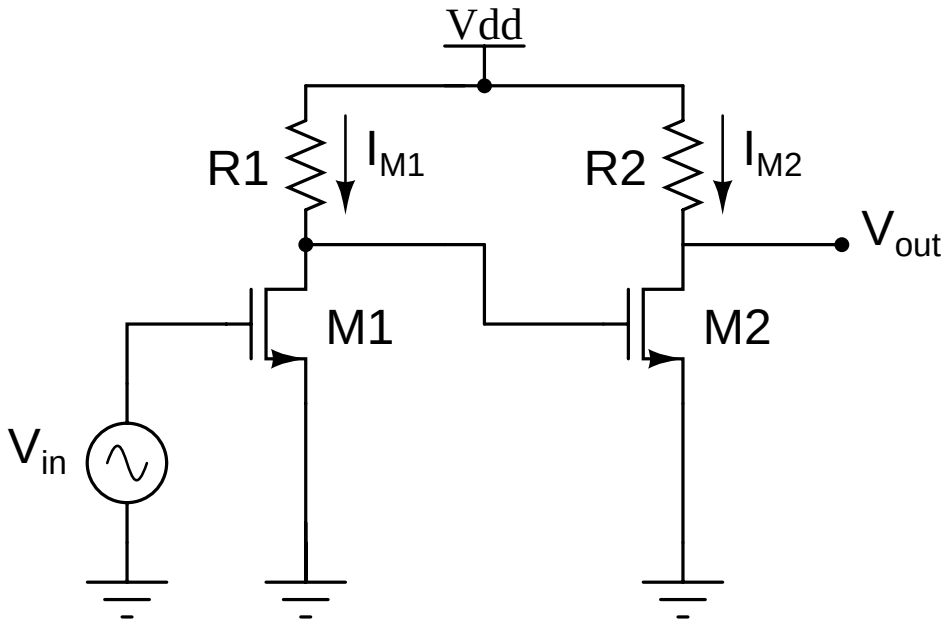

Two stage amplifier with 4th degree non-linearity in V_{in}

$$v_{out} = c_0 + c_1 v_{in} + c_2 v_{in}^2 + c_3 v_{in}^3 + c_4 v_{in}^4$$

S. Sindia, V. Singh and V. D. Agrawal, "Polynomial Coefficient Based DC Testing of Nonlinear Analog Circuits," pp.69-74, GLSVLSI 2009.

Polynomial Coefficients

$$c_0 = V_{DD} - R_2 K \left(\frac{W}{L}\right)_2 \left[\begin{array}{l} (V_{DD} - V_T)^2 + R_1^2 K^2 \left(\frac{W}{L}\right)_1^2 V_T^4 \\ -2(V_{DD} - V_T) R_1 \left(\frac{W}{L}\right)_1 V_T^2 \end{array} \right]$$

$$c_1 = R_2 K \left(\frac{W}{L}\right)_2 \left[4 R_1^2 K^2 \left(\frac{W}{L}\right)_1^2 V_T^3 + 2(V_{DD} - V_T) R_1 K \left(\frac{W}{L}\right)_1 V_T \right]$$

$$c_2 = R_2 K \left(\frac{W}{L}\right)_2 \left[2(V_{DD} - V_T) R_1 K \left(\frac{W}{L}\right)_1 - 6 R_1^2 K^2 \left(\frac{W}{L}\right)_1^2 V_T^2 \right]$$

$$c_3 = 4 V_T K^3 \left(\frac{W}{L}\right)_1^2 \left(\frac{W}{L}\right)_2^2 R_1^2 R_2$$

$$c_4 = -K^3 \left(\frac{W}{L}\right)_1^2 \left(\frac{W}{L}\right)_2^2 R_1^2 R_2$$

V-Transform

Definition

$$V_{C_i} = e^{\gamma C'_i} \ \forall\, 0 \leq i \leq n$$

$$\frac{dC'_i}{dp_j} = \left| \frac{dC_i}{dp_j} \right| \ \forall\, 0 \leq i \leq n$$

C_i – ith polynomial coefficient
C'_i – ith modified polynomial coefficient
V_{C_i} – ith V-Transform coefficient

V-Transform Coefficient – Sensitivity Gain

Sensitivity of coefficients

$$\frac{S_{p_i}^{V_{C_i}}}{S_{p_i}^{C_i}} = \frac{\left|\frac{dC_i}{dp_i}\right| \gamma e^{\gamma C_i'} \bullet \frac{p_i}{e^{\gamma C_i'}}}{\frac{dC_i}{dp_i} \bullet \frac{p_i}{C_i}} = \gamma C_i$$

γC_i – Increased sensitivity over ordinary polynomial coefficients
γ – Sensitivity parameter that can be chosen according to the desired degree of sensitivity

Test Setup

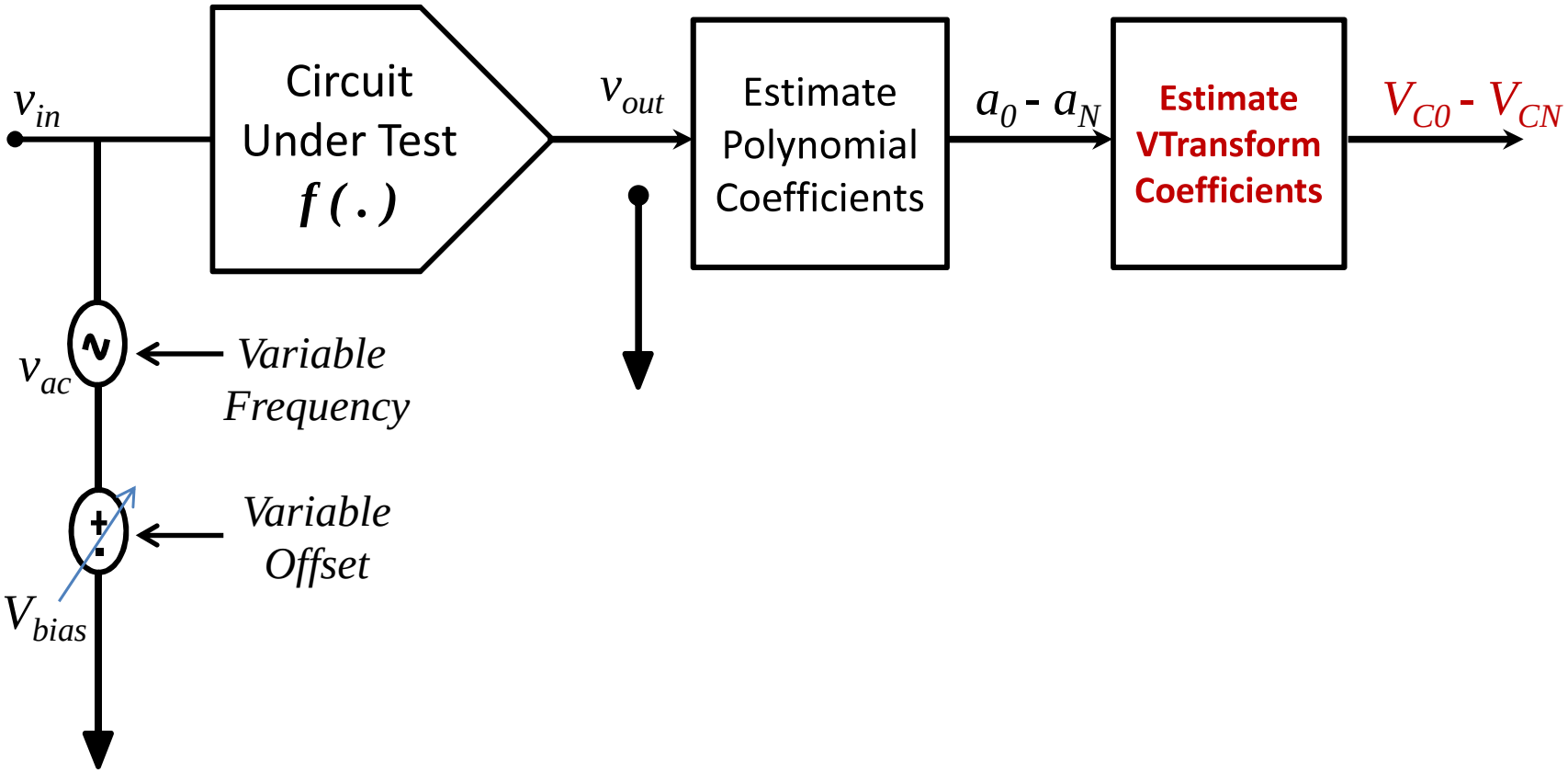
v_{in}
Circuit Under Test
$f(.)$
v_{out}
Estimate Polynomial Coefficients
a_0 - a_N
Estimate VTransform Coefficients
V_{C0} - V_{CN}
v_{ac}
Variable Frequency
Variable Offset
V_{bias}

Outline

Fault Classification

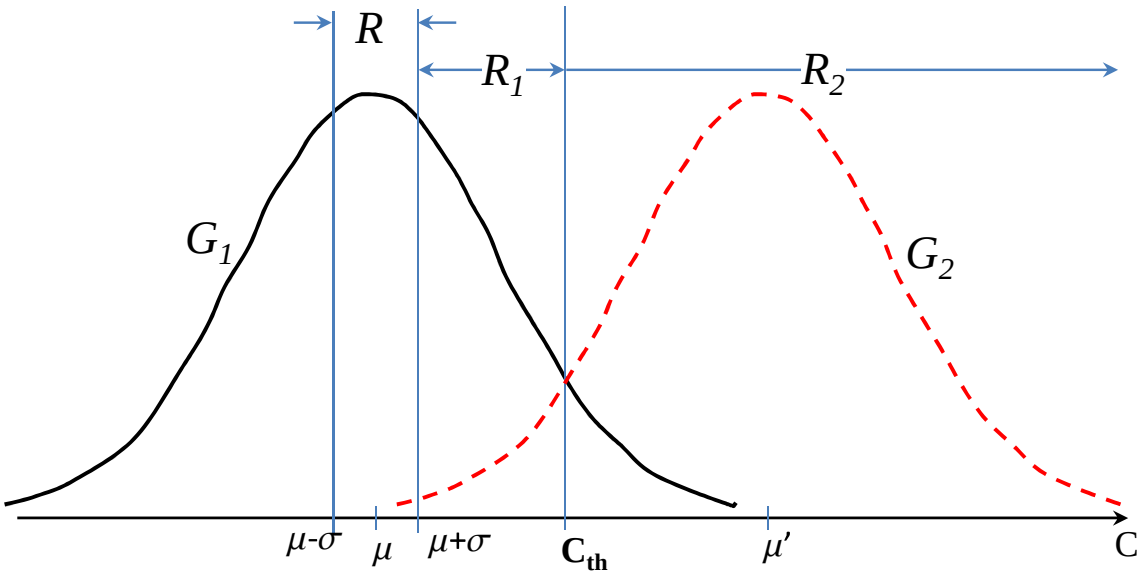

$$C \lessgtr_{\mathcal{H}_1}^{\mathcal{H}_2} C_{th}$$

$\mathcal{H}_1$: Fault likely due to manufacturing defect

$\mathcal{H}_2$: Fault likely due to process parameter variation

Fault Classification

Summary of steps

- Probability density function of the coefficients are computed by Monte Carlo simulations for fault-free
- Probability density function of the coefficients are computed by Monte Carlo simulations for faulty circuits
- Threshold values of coefficients – Boundaries between process variation (PV) and manufacturing defects is estimated for each frequency
- Confidence of classifying a fault as PV or manufacturing defect is improved by observing one or more coefficients at multiple frequencies.

Fault Classification

Confidence of classification

If P_i is the probability of coefficient being outside its permissible interval due to process variation, then we define confidence in diagnosing CUT to be faulty due to PV, C (N is the total number of coefficients).

$$C = \frac{1}{1 - \prod_{i=1}^{i=N} (1 - P_i)}$$

Outline

Results – Benchmark Elliptic Filter

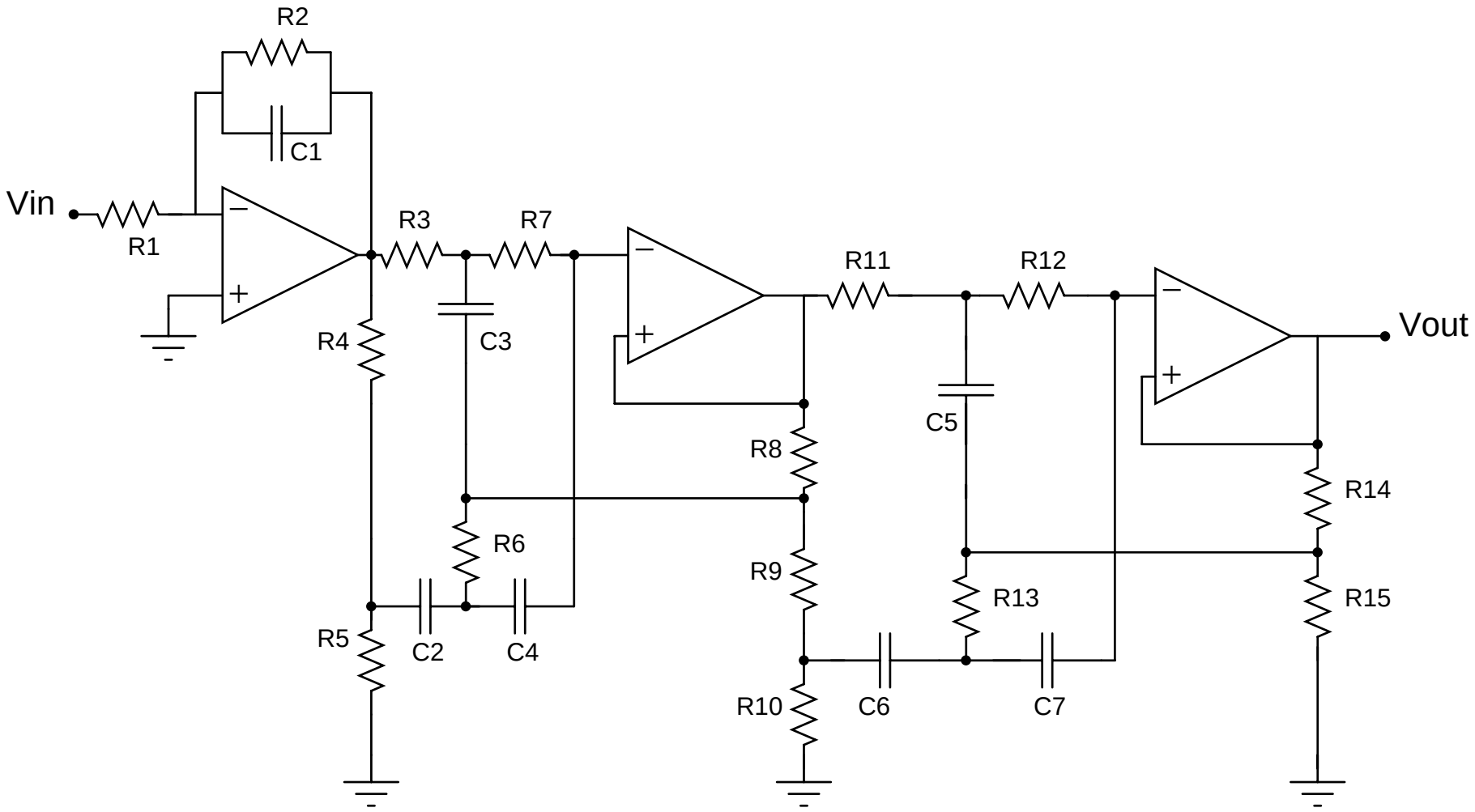

Results - V-Transform Coefficients

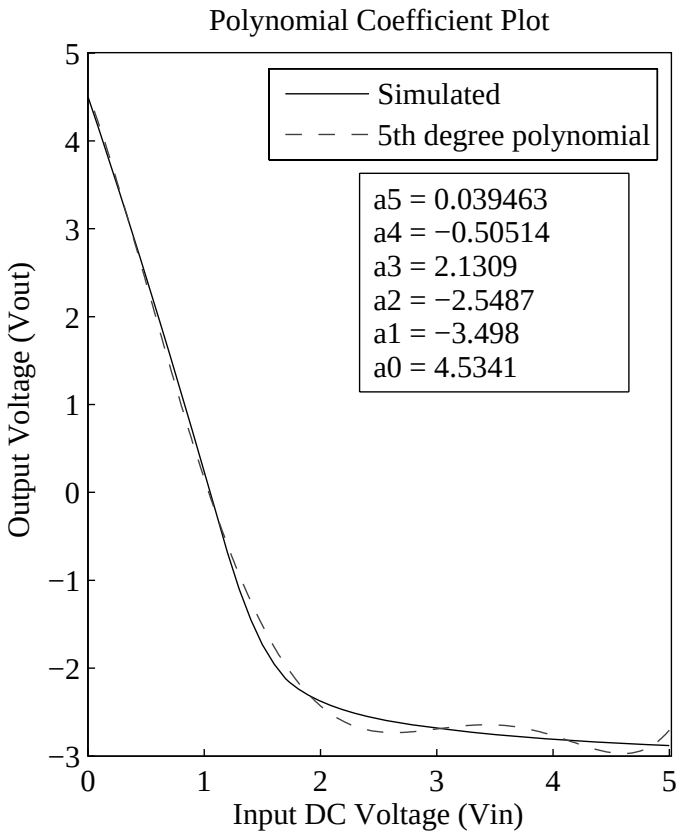

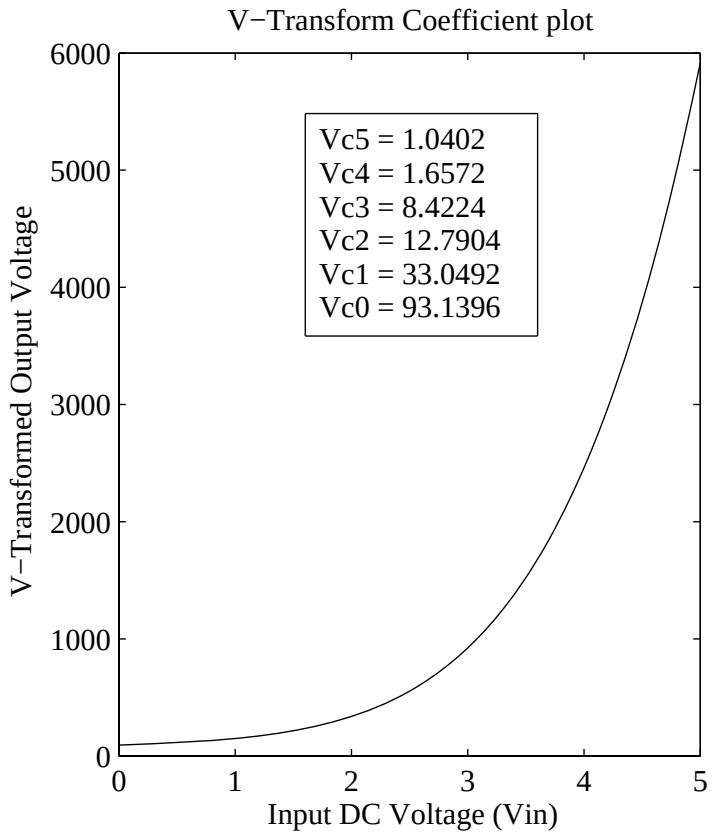

$V_{C_5} = 1.0402$ $V_{C_4} = 1.6572$ $V_{C_3} = 8.4224$ $V_{C_2} = 12.7904$ $V_{C_1} = 33.0492$ $V_{C_0} = 93.1396$

Results at DC - Elliptic Filter

Parameter combinations leading to max values of V-Transform coefficients with α = 0.05

Circuit Parameter, (ohm)	V_{c_0}	V_{c_1}	V_{c_2}	V_{c_3}	V_{c_4}	V_{c_5}
R_1 = 19.6k	18.6k	20.5k	20.5k	20.5k	18.6k	18.6k
R_2 = 196k	186k	205k	186k	186k	186k	205k
R_3 = 147k	139k	154k	154k	154k	139k	154k
R_4 = 1k	950	1010	1010	1010	1010	1010
R_5 = 71.5	70	80	80	70	80	70
R_6 = 37.4k	37.4k	37.4k	37.4k	37.4k	37.4k	37.4k
R_7 = 154k	161k	161k	146k	161k	146k	146k
R_{11} = 110k	115k	115k	104k	115k	104k	104k
R_{12} = 110k	104k	115k	104k	104k	104k	104k

Results at DC - Elliptic Filter

Parameter combinations leading to min values of V-Transform coefficients with α = 0.05

Circuit Parameter, (ohm)	V_{c_0}	V_{c_1}	V_{c_2}	V_{c_3}	V_{c_4}	V_{c_5}
R_1 = 19.6k	20.5k	18.6k	18.6k	20.5k	20.5k	20.5k
R_2 = 196k	205k	186k	205k	205k	205k	186k
R_3 = 147k	150k	139k	139k	146k	154k	139k
R_4 = 1k	1010	950	950	950	950	950
R_5 = 71.5	80	70	70	80	70	80
R_6 = 37.4k	39.2k	39.2k	39.2k	39.2k	35.5k	39.2k
R_7 = 154k	146k	146k	161k	146k	161k	161k
R_{11} = 110k	104k	104k	115k	104k	115k	115k
R_{12} = 110k	115k	104k	115k	115k	115k	115k

Results at DC - Elliptic Filter

Fault detection for some injected faults

Circuit Parameter	Out of bound polynomial coefficient	Fault detected?	Out of bound V-Transform coefficient	Fault detected?
R_1 down 25%	c_3, c_4	Yes	$V_{c_0} - V_{c_4}$	Yes
R_2 down 30%	c_2	Yes	V_{c_2}, V_{c_5}	Yes
R_3 up 25%	c_3	Yes	V_{c_1}, V_{c_2}, V_{c_3}	Yes
R_4 down 30%	c_0	Yes	$V_{c_0} - V_{c_4}$	Yes
R_5 up 30%	c_4	Yes	V_{c_0}, V_{c_4}	Yes
R_7 up 10%	None	PV (C = 200)	V_{c_1}, V_{c_2}	Yes
R_{11} up 15%	None	PV (C = 120)	V_{c_4}, V_{c_5}	Yes
R_{12} down 15%	None	PV (C = 90)	V_{c_4}, V_{c_5}	Yes

Conclusion and Future Work

Conclusion

- Technique for parametric fault detection in analog circuits – faults as small as 25% were uncovered for an elliptic filter example.
- Addressed parametric fault distinction between process variation induced faults.
- Enhanced technique for uncovering parametric faults by increasing sensitivity of polynomial coefficients to circuit parameters.

Conclusion and Future Work

Conclusion

- Technique for parametric fault detection in analog circuits – faults as small as 25% were uncovered for an elliptic filter example.
- Addressed parametric fault distinction between process variation induced faults.
- Enhanced technique for uncovering parametric faults by increasing sensitivity of polynomial coefficients to circuit parameters.

Future work

- Technique for optimal choice of frequencies at which CUT ought to be excited
- Optimal order of polynomial expansion as a tradeoff between test time and diagnostic resolution
- Algorithms to predict/map RF & other circuit specifications to polynomial/V-Transform coefficients