Sizing A Stand-alone PV System

What size PV array do I need?

What size battery bank do I need

Metric: How serious is a loss of power?

① PV in space

→ loss of power is very serious

→ PV in space is very reliable

→ no weather effects

→ constant, predictable insolation (when in sunlight)

② PV powered refrigeration

→ hospitals in 3rd world

→ risk: expensive, loss of life

③ PV powered signs, emergency phones, RR crossings

→ risk ranges from minimal to loss of life

④ PV powered residence, hunting cabin, etc.

→ risk is usually just convenience

1. Evaluating Risk of Loss of power

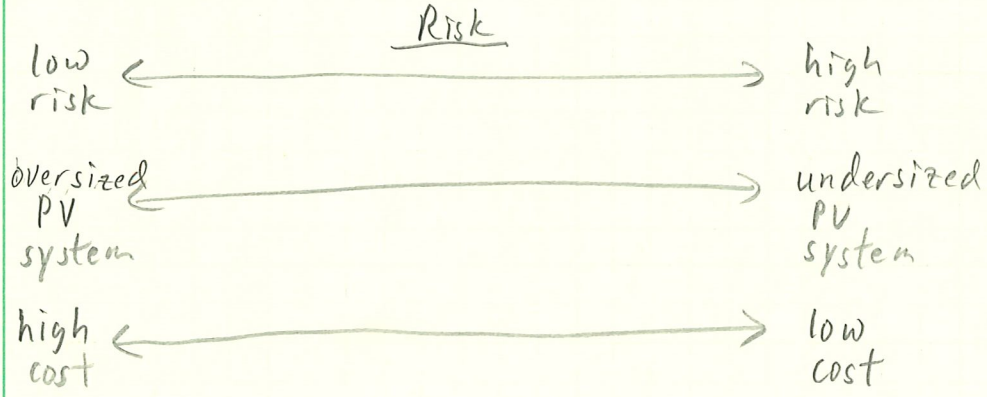

a. Determing PV Power Needs

① select which electric appliances will be powered off of PV

→ note Traditional high power electric appliances are usually not powered off of PV

→ water heater

→ space heater / heat pump

→ AC

→ stove / oven

→ clothes dryer

→ Select energy efficient, low power devices

② determine how many of each appliance and how many hours per day it will be used

③ determine estimated power needed per day (Wh/day)

→ show Fig 5.15 ✗ → 2.2 kWh/day

④ Determine needed size of the PV array and the battery bank

a. The PV array

→ "Peak Sun Hours" → equivalent number of daily hours at $1 kW/m^2$ insolation

ex: if an inclined array receives $3 kWh/m^2$ per day in April (on average) → this corresponds to 3 peak sun hours

Appliance		Power (W)	No.	Average hrs/day	Average Wh/day
Light		11	8	3	260
TV		60	1	4	240
Computer		60	1	3	180
Refrigerator		80	1	24 (on-off)	500
Kettle		1000	1	0.2	200
Microwave Oven		700	1	0.4	280
Food Mixer		400	1	0.15	60
Washing Machine	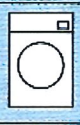	800	1	0.6	480
				Total	2200

Figure 5.15 Appliances and energy requirements for a stand-alone system.

→ Examine daily solar radiation data for your location

→ show Fig 5.16 *

→ observe that the inclination angle effects peak sun hours over the year

→ decide which time of year the risk of power loss is most critical

→ summer vacation cabin ?

→ winter ski lodge ?

→ fall hunting cabin ?

→ year round residence

→ Unless you have lots of money, you want to avoid oversizing you PV system

① Sizing

$E_D \equiv$ average daily amount of electricity needed

$P_{PV} \equiv$ rated peak power of the PV array

$S_p \equiv$ number of peak sun hours (per day) in month of interest

$\eta =$ overall system efficiency

→ solve for P_{PV} :

$$P_{PV} = \frac{E_D}{S_p \, \eta}$$

for typical values : $E_D = 2.2$ kWh/day, $S_p = 3.5$h <March>

$\eta = 60\%$

$$\therefore P_{PV} = \frac{2.2}{3.5 \times 0.6} = 1.05 \text{ kW}_p$$ → useful March – Sept.

Peak Sun Hours

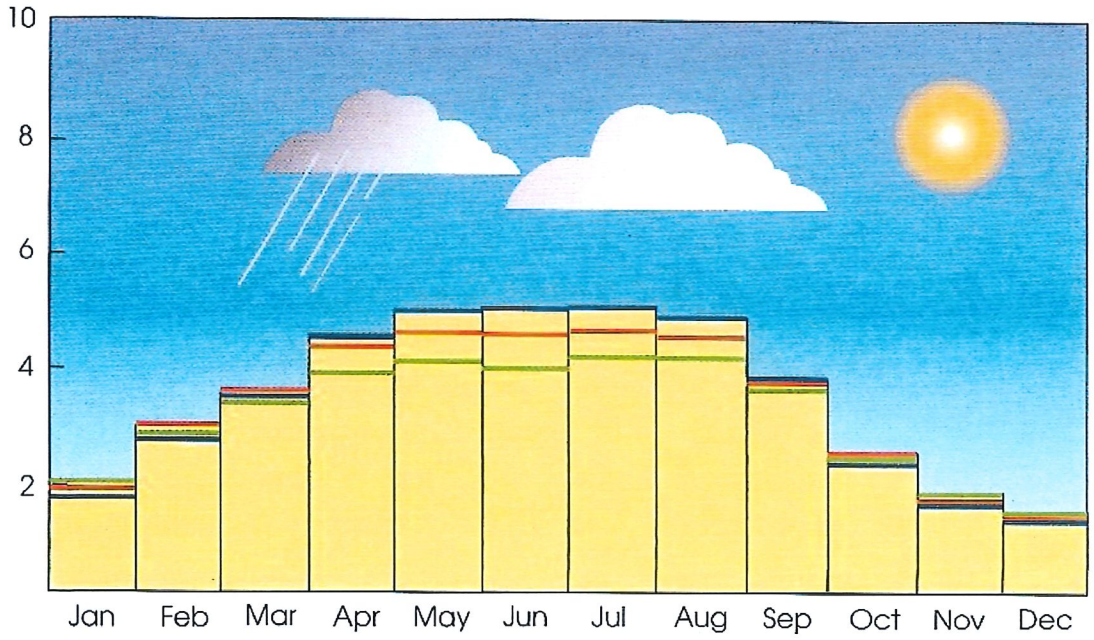

Figure 5.16 Daily solar radiation in kWh/m^2 on south-facing inclined PV arrays for a location at latitude 48 °N in southern Germany. Three values of array tilt are illustrated: 33 ° (blue); 48 ° (red); and 63 ° (green).

60 % efficiency → typical value : product of

→ PV module w/o MPP tracking : 85%

→ battery bank : 85%

→ charge controller, blocking diodes, cables: 92%

→ inverter : 90%

With MPP tracking : $\eta \sim 70\%$, but higher initial cost

→ ;; typically oversize by ~ 20%

→ ;; use a 1,2 KWp PV module

b. <u>sizing the Battery Bank</u>

→ typically size for 5 days

$5 \times 2{,}2\,KWh = 11\,KWh$

→ if a life dependant application → size for 15 days or more

C ≡ battery bank capacity

N = number of days of storage

E_D = daily electrical requirement

D = allowable depth-of-discharge

η_{inv} = inverter efficiency <if AC required>

<u>ex</u>: 5 days, 80% max battery discharge, 90% inverter efficiency

$$\therefore C = \frac{N E_D}{D \eta_{inv}}$$

$$= \frac{5 \times 2{,}2}{0{,}8 \times 0{,}9}$$

$$= 15{,}3\ KWh$$

If 24V battery bank → 638 Ah

→ similar to the PV array, slightly oversize the battery bank

→ Total System

8 150 W_p PV modules (1.2 KW_p total)

8 12 V 175 Ah batteries (16.8 KWh total)

↳ 4 parallel strings of 2 batteries in series

→ Show Fig 5.17 *

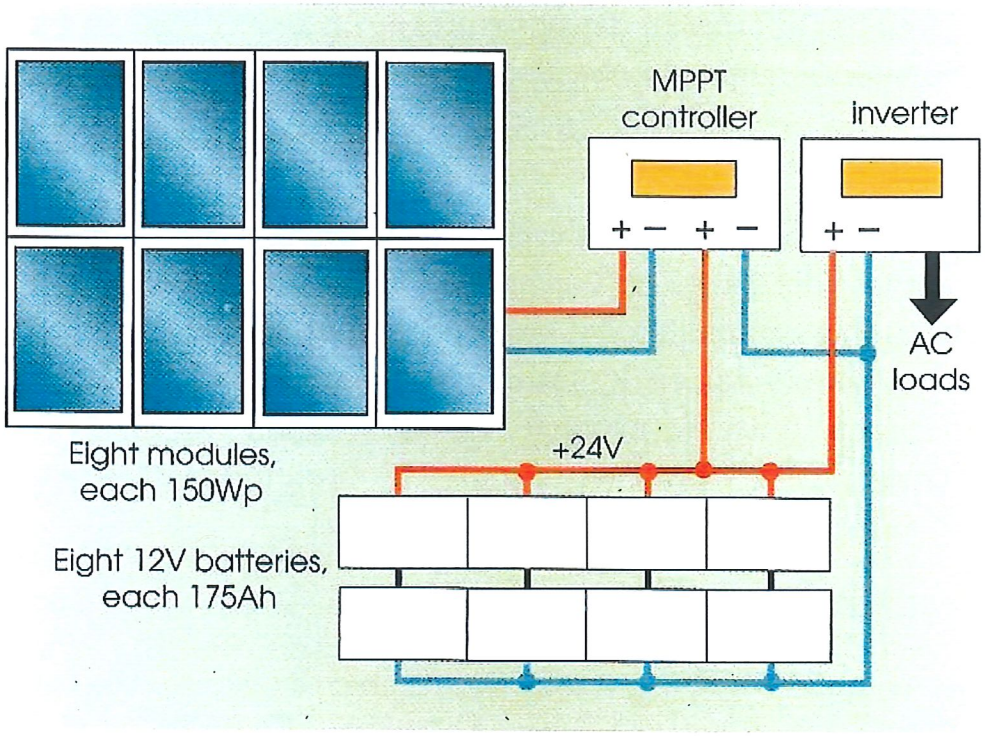

Figure 5.17 A suitable system for the holiday home.

1) Space Stand-alone Applications

→ 1st significant PV market

→ 50 years ago, PV was so expensive that few other applications could afford it

a. Special Features of Space environment

① space radiation can damage PV cells

② sunlight in space has a different spectrum than on earth after atmospheric filtering → AM0 : "air mass zero"

③ space platforms often experience dramatic changes in temperature and sunlight intensity from moving in and out of shadow

→ induces high thermal stresses in PV cells and modules

④ size/weight is very expensive to launch into space

→ want to keep PV system as small as possible

⑤ sustained performance is paramount, especially for long space missions

b. Variety in space environments

① temperature extremes

→ Low earth orbit : -80°C in shadow

→ Jupiter orbit : -125°C (even in sunshine!)

→ Mars : +140°C in sunlight

② variable sunlight intensity

→ at Mercury : ~ double the sunlight intensity at earth

→ at Jupiter : ~ 1/13 " " " " .

③ radiation

→ mid-earth orbits (MEOs) : passes through the Van Allen radiation belts

→ near Jupiter

→ during high solar activity (flares, etc)

c. space application PV

→ Triple-junction cells based on GaAs are used

→ upto 30% efficiency in AM0

→ International space station

→ uses Si PV cells

→ over 100 kW of average power

→ over 3000 m^2 of PV cells

④ atmospheric chemistries / properties on other planets

Mars → dust, ~corrosive atmosphere ??

Venus → very hot, ~450°C very corrosive / high pressure atmosphere, cloud cover