MEMS SMD Device (Vibration Isolator)

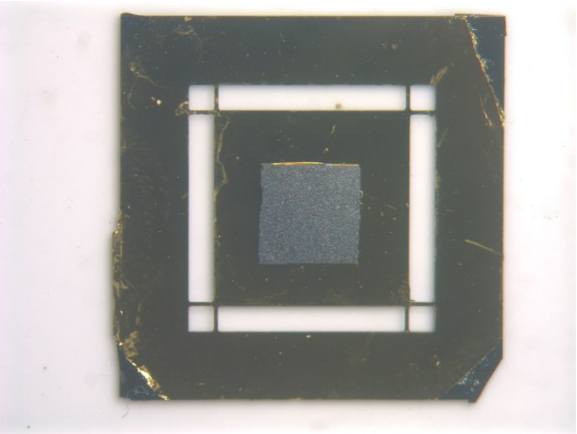

Measured Transmissibility

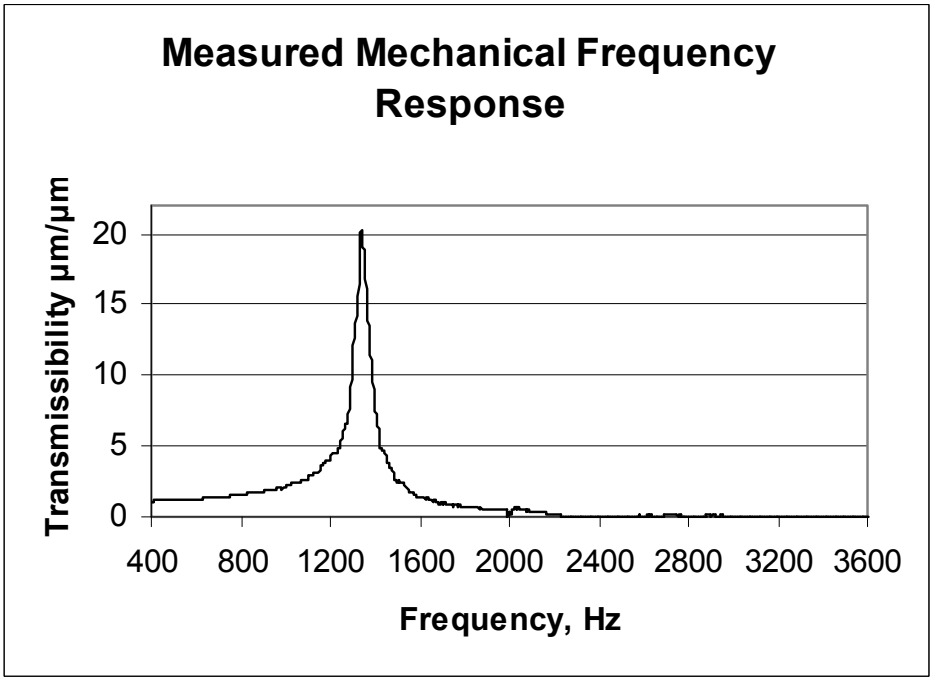

Device mounted over PCB with a 100µm thick plastic spacer. Round electrode under center of proof mass. Proof mass centered over surrounding electrode. Outer electrode matches height of other electrodes for spacer.

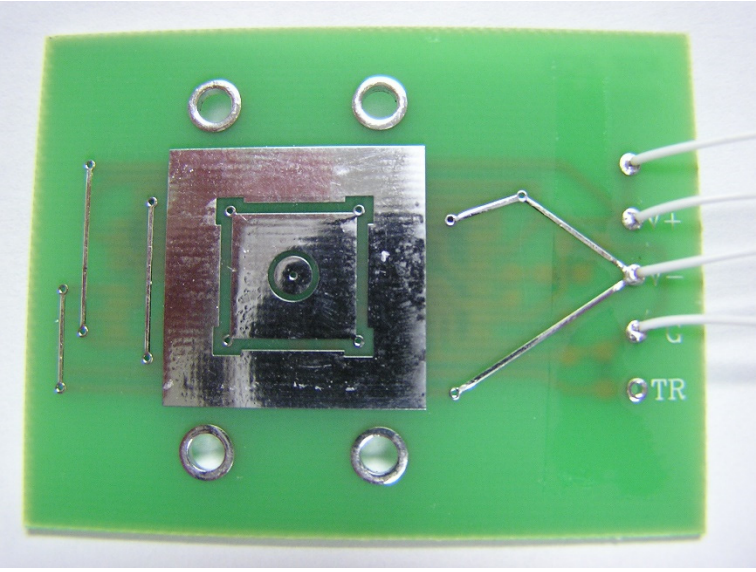

Plastic Spacer

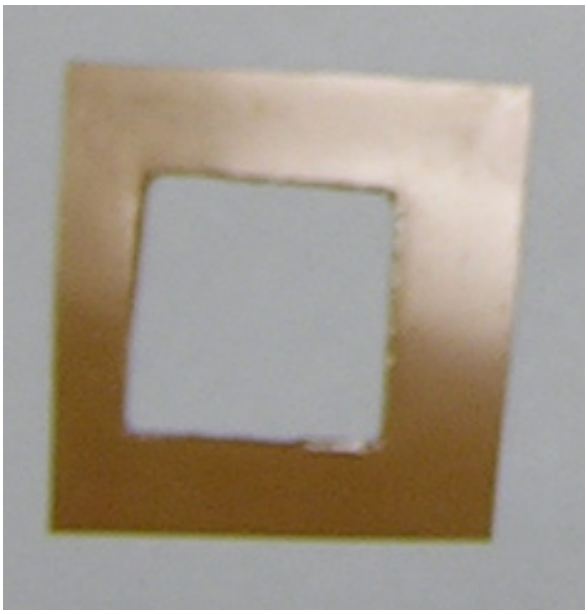

Velocity sensor interface circuit (amplifier circuit follows

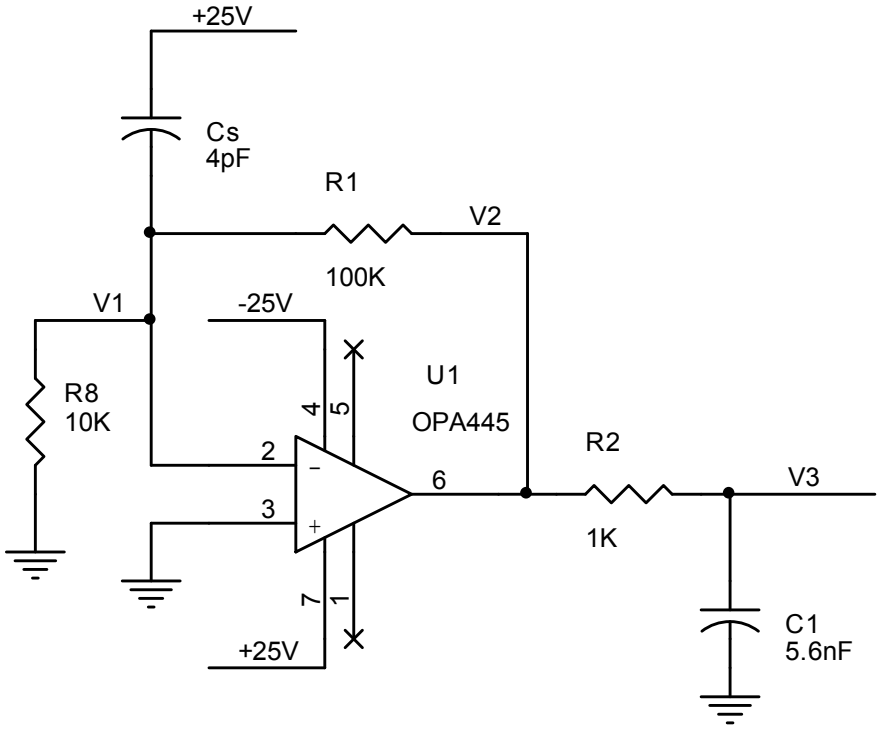

Velocity sensor's response (theoretical)

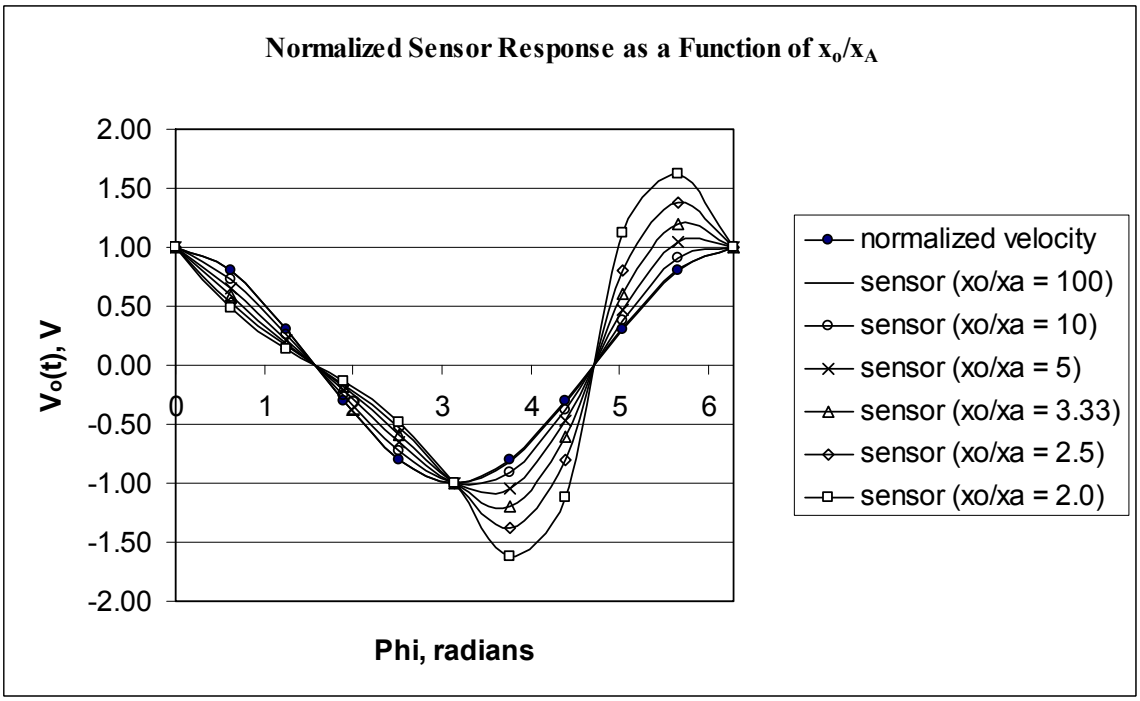

Spectral response of the sensor (theoretical)

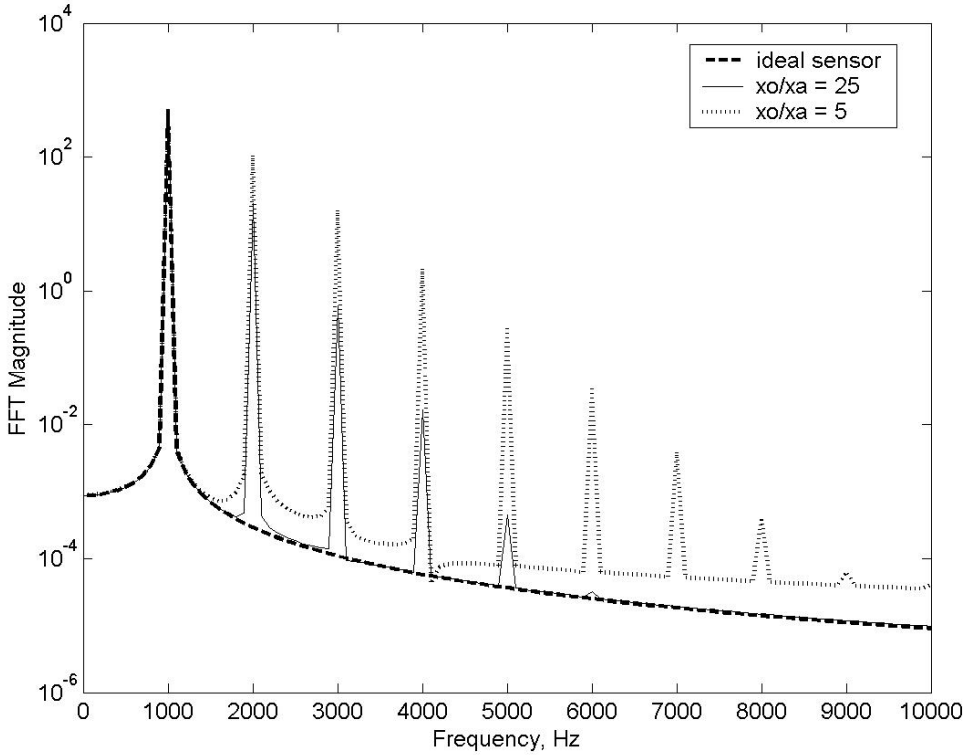

Spectral response of the sensor (test data) for x_o/x_A=8.4

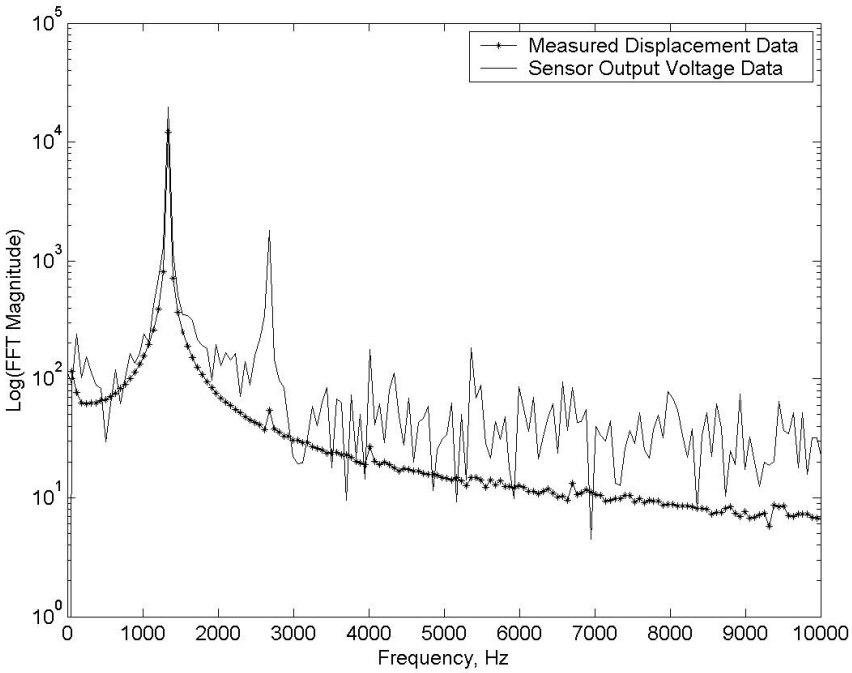

Total harmonic distortion of the sensor (theoretical)

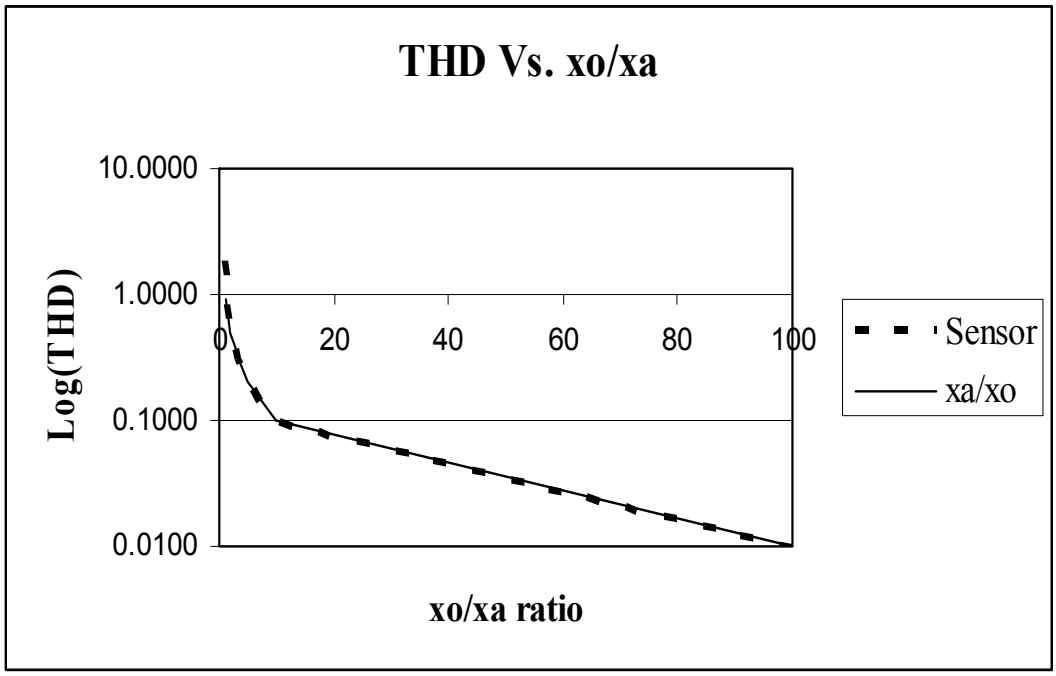

Velocity sensor's output for a sinusoidal (vibrational) input at ω_n

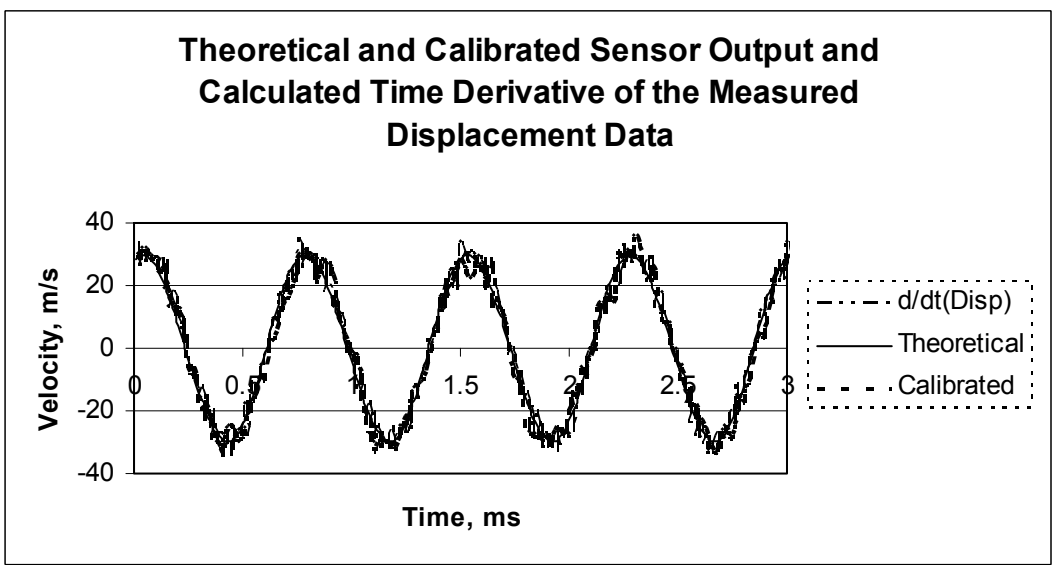

Closing the loop for active Q control

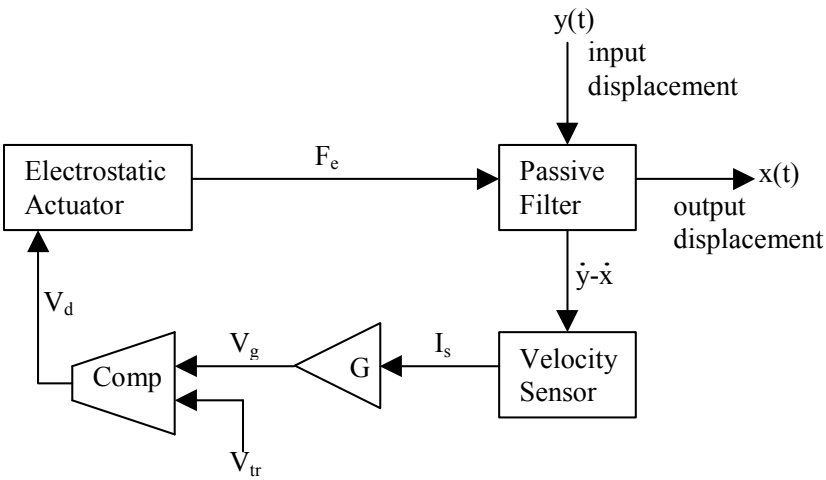

Device model

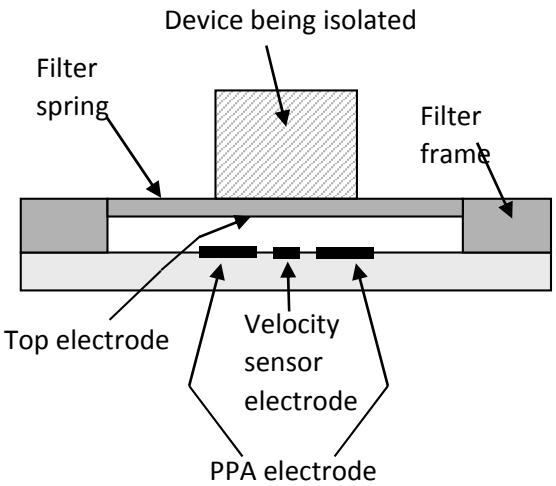

Feedback technique is nonlinear: turn the actuator on fully whenever the electrodes are moving away from each other – drains energy from the system, lowers Q

Sensor and feedback electronics

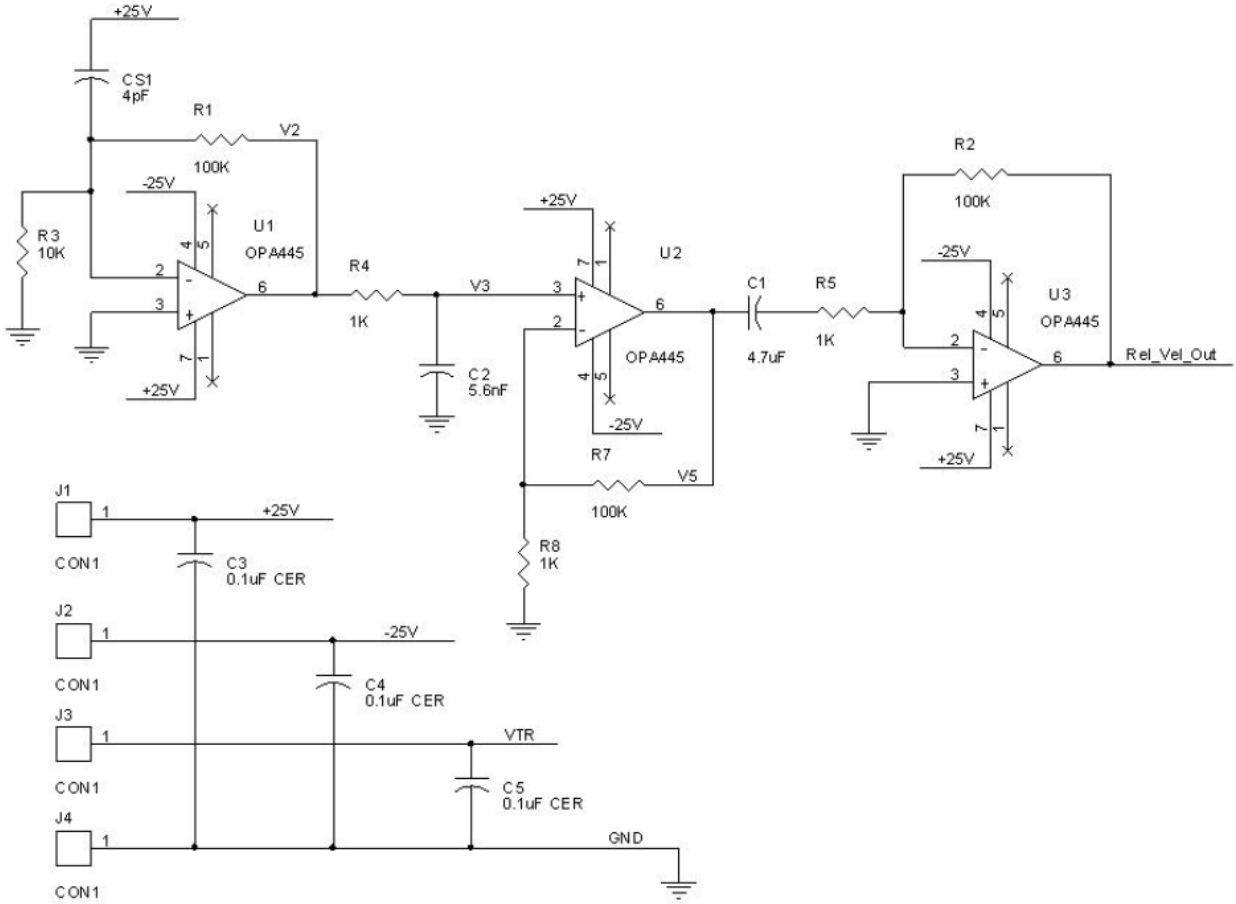

Electronics on backside of PCB

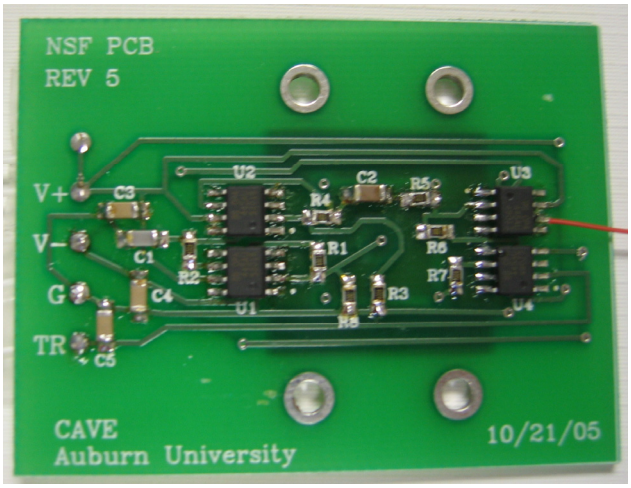

Comparison of open loop and closed loop response