**Wednesday, 2/1/17**

1) Phase Shift Oscillator

The phase shift oscillator consists of an A(jω) negative gain stage, and a β(jω) stage that provides a +180° or a -180° phase shift at the oscillation frequency.

a. Consider the RC ladder network below:

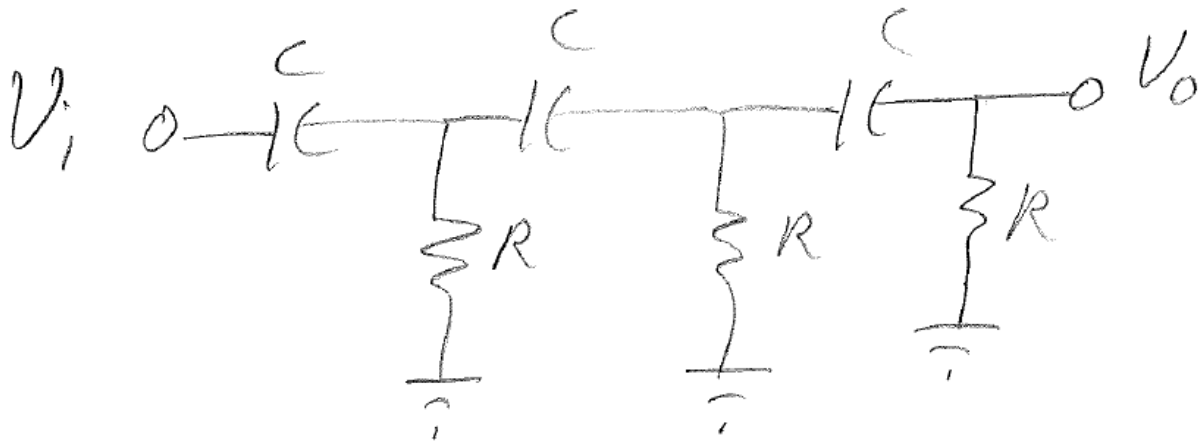


Procedure for analyzing any ladder network:

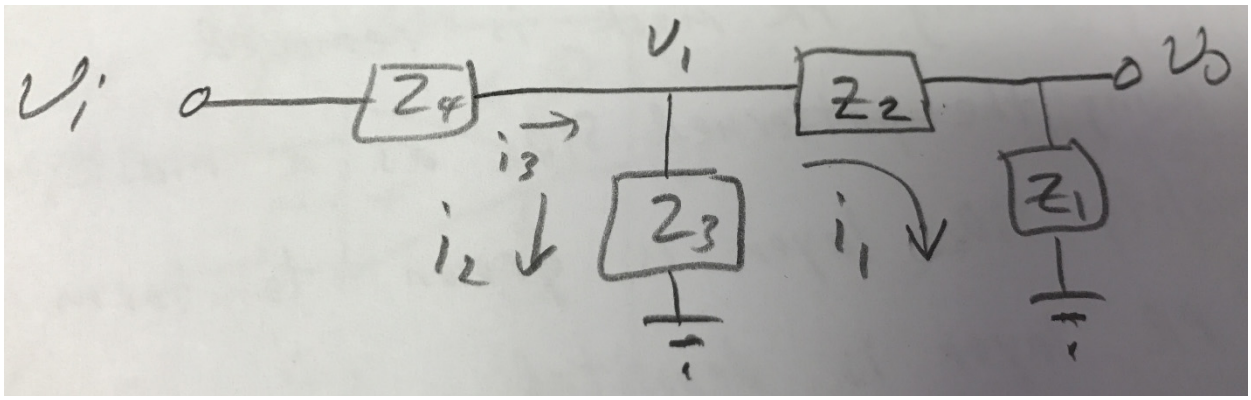


$$i_1 = \frac{v_o}{Z_1} \qquad (1)$$

$$v_1 = v_o + i_1 Z_2 \qquad (2)$$

$$i_2 = \frac{v_1}{Z_3} \qquad (3)$$

$$i_3 = i_1 + i_2 \qquad (4)$$

$$v_i = v_1 + i_3 Z_4 \qquad (5)$$

Then (1) → (2), (2) → (3), (1) and (3) → (4), (2) and (4) → (5),

Then calculate $\frac{v_o}{v_i}$ from result

Passive Ladder Filters

(1) Use the circuit topology shown above, with a nominal 1 Ω input resistor and a nominal 1 Ω output or load resistor, and a nominal LP cutoff frequency of 1 rad/s.
(2) Select the type of filter you desire (LP, HP, BP, BR, etc.), the style (Butterworth, Bessel, Chebyshev, etc.), and the order of the filter.
(3) Get the polynomial coefficients from a table, Matlab or a filter design program.
(4) Scale the polynomial coefficients based on the filter type desired.
(5) Scale the polynomial coefficients to achieve the desired cutoff frequency.
(6) Scale the polynomial coefficients to achieve reasonable values for filter resistances, capacitances and inductors.
(7) Build and test…

Back to the oscillator…

Through circuit analysis of the RC ladder network used here:

$$\frac{V_o}{V_i} = \frac{(RCs)^3}{(RCs)^3 + 6(RCs)^2 + 5(RCs) + 1}$$

$$\frac{V_o}{V_i}(j\omega) = \frac{-j(RC\omega)^3}{-j(RC\omega)^3 - 6(RC\omega)^2 + 5j(RC\omega) + 1}$$

Magnitude:

$$\left|\frac{V_o}{V_i}(j\omega)\right| = \frac{(RC\omega)^3}{\sqrt{(1-6(RC\omega)^2)^2 + (5RC\omega - (RC\omega)^3)^2}}$$

Phase:

$$\underline{\left|\frac{V_o}{V_i}(j\omega)\right|} = -\tan^{-1}(\infty) - \tan^{-1}\left(\frac{5RC\omega - (RC\omega)^3}{1-6(RC\omega)^2}\right)$$

At $\omega = \frac{1}{RC\sqrt{6}}$, $\quad \underline{\left|\frac{V_o}{V_i}(j\omega)\right|} = -180^o$

And, at $\omega = \frac{1}{RC\sqrt{6}}$, $\quad \left|\frac{V_o}{V_i}(j\omega)\right| = \frac{1}{29}$

Therefore, A(jω) = -29 for oscillation.

Consider the resulting oscillator circuit shown below:

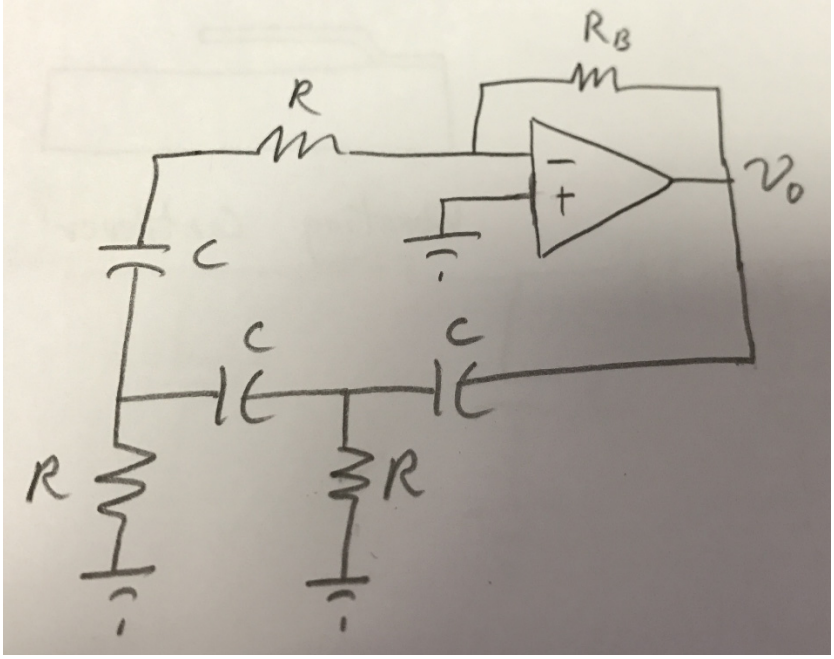


Design procedure:

(1) Select oscillation frequency and amplitude desired.
(2) Select the op amp. Note: gain of -29 limits op amp selection based on desired frequency GBW product.
Example with a 10 MHz GBW op amp: closed loop 3dB BW: 344.8 KHz. 10% of that is 34.48 KHz
(3) Select values for R and C.
(4) Size $R_B$ to obtain needed gain of -29

b. <u>RC:CR transformation phase shift oscillator</u>

Voltage follower (a second op amp) is needed to prevent loading of the CR ladder circuit

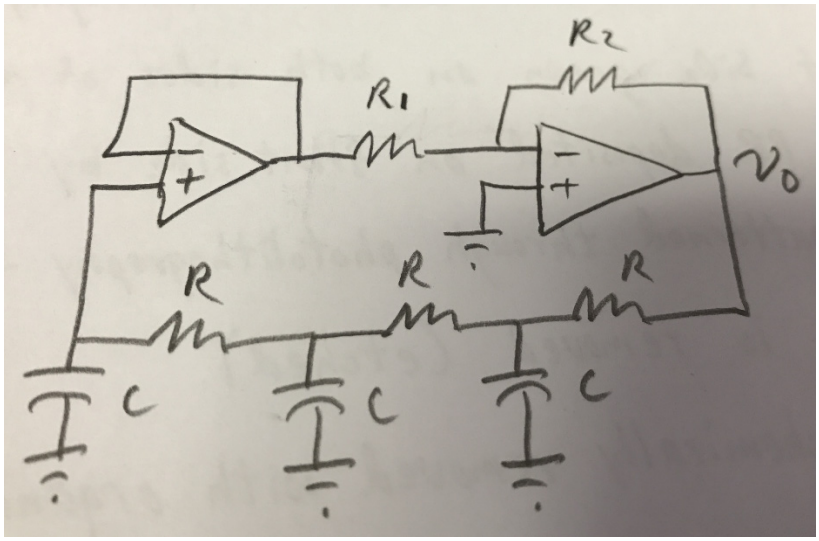


$$A(j\omega)\beta(j\omega) = \frac{-\frac{R_2}{R_1}}{(sCR)^3 + 5(sCR)^2 + 6sCR + 1}$$

For oscillation: $\omega = \frac{\sqrt{6}}{RC}$ and $\frac{R_2}{R_1} = 29$