Fall 2025 ELEC 7970 Homework 1 Solution:

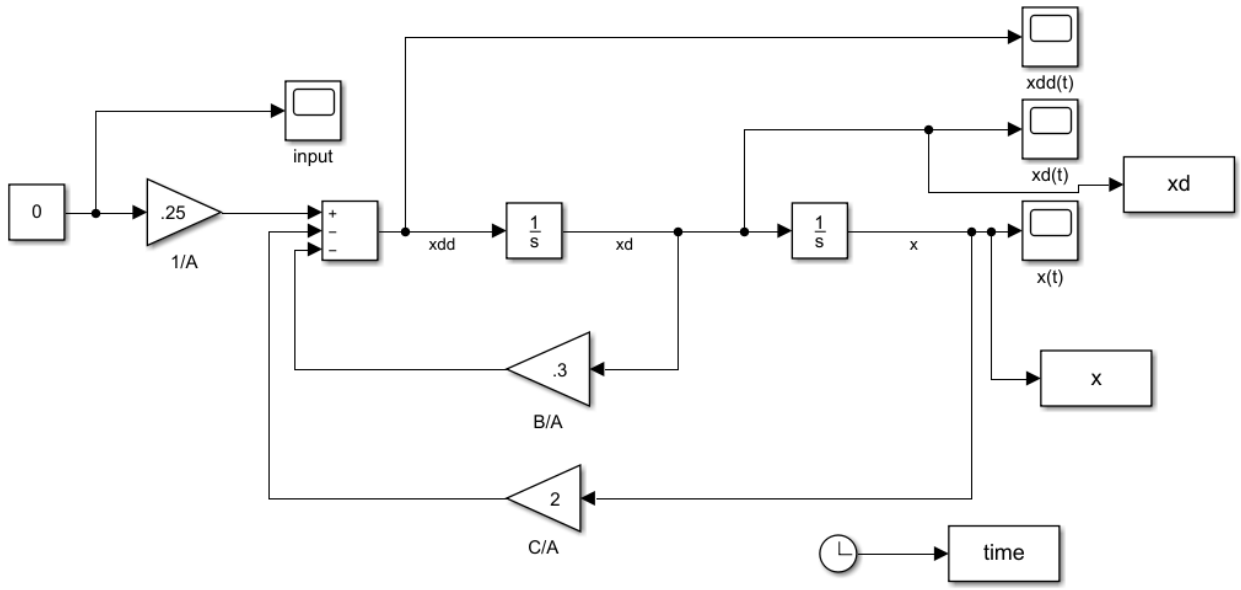

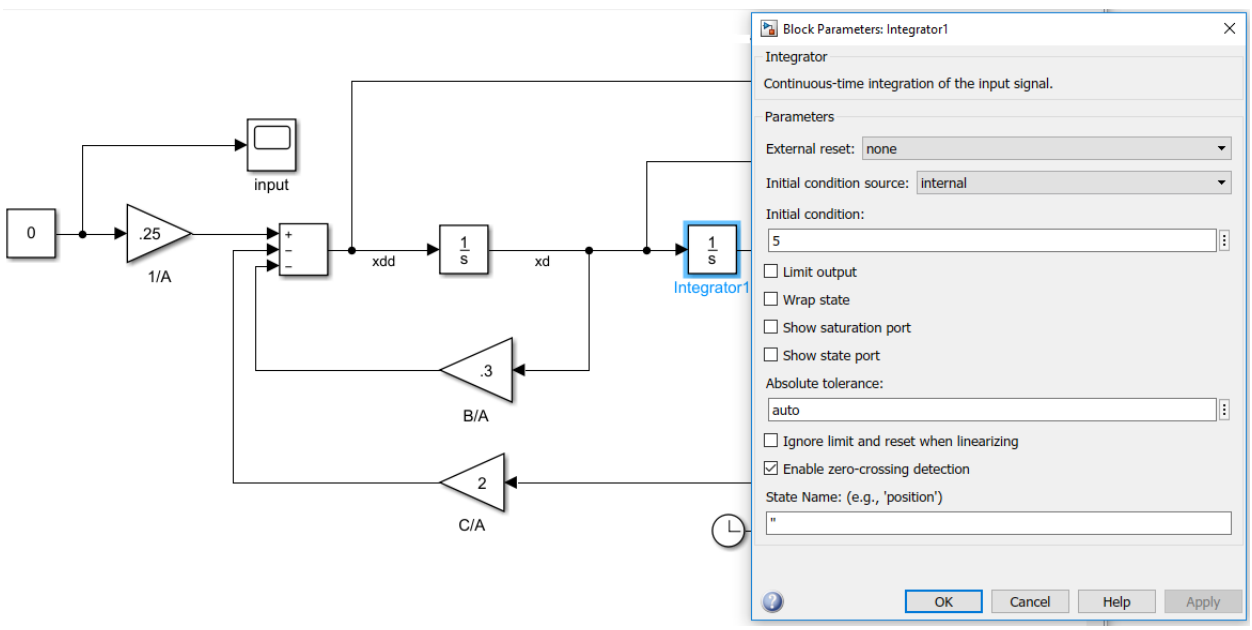

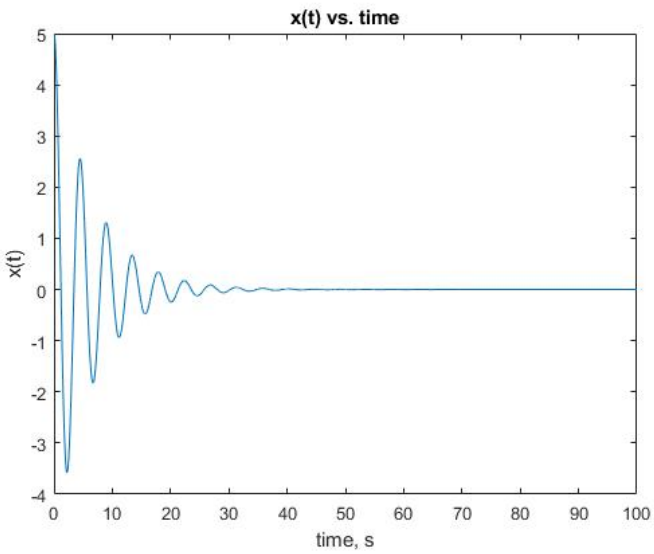
x(t) vs. time
x(t)
time, s

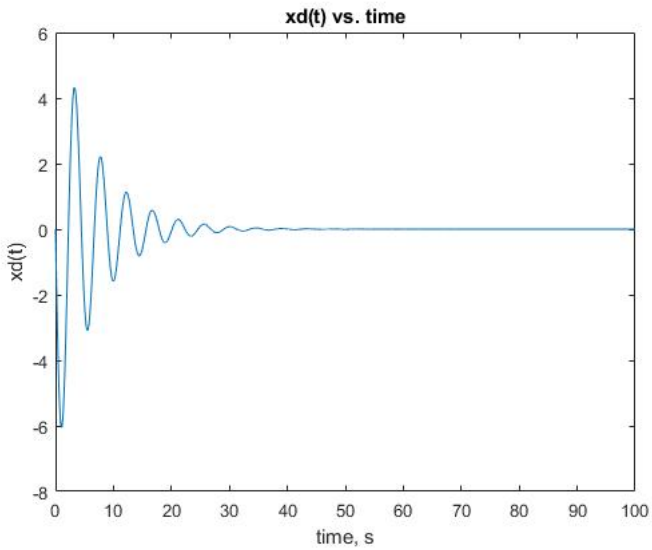
xd(t) vs. time
xd(t)
time, s

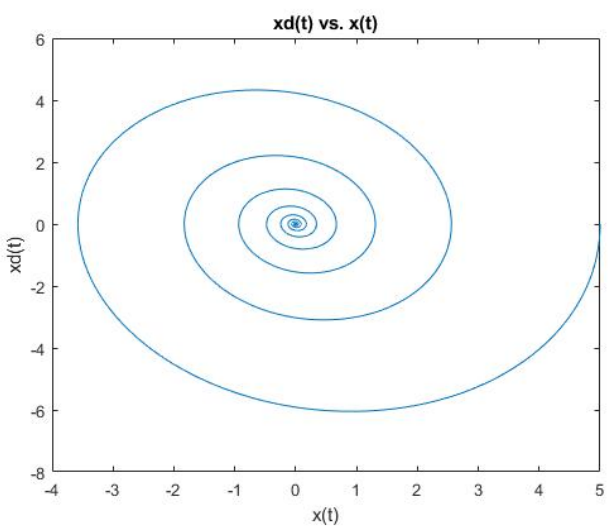
xd(t) vs. x(t)
xd(t)
x(t)