Name: Key

Exam #2 **ELEC 2210** **Wed 11/17/20**

I verify below by my signature that I received no assistance on this exam from another person:

Signature:

Problem 1: (15 points)

What is the output frequency of a 7 inverter CMOS ring oscillator with a R_{on} = 2.0 kΩ and C = 1.1 pF (5 points)?

$$f_{OUT} = \frac{1}{2N(2.4 C R_{on})}$$

$$= \frac{1}{2(7)(2.4(1.1\times10^{-12})(2000))}$$

$$= 13.5 \text{ MHz}$$

Match the question with an answer by writing the letter of the answer in the blank next to the question. No answer is used more than once. (20 points)
Questions

1) This is parasitic-BJT event that is very bad for CMOS: I
2) A non-ideal effect in BJTs: P
3) This can be used to realize a mathematical function in a memory: E
4) A memory technology where UV light can be used to erase data: K
5) When current flows through a MOSFET that is off: L
6) This 2 transistor circuit can simplify the design of some logic gates: J
7) A CMOS inverter circuit with the input and output shorted can be used as a: B
8) A transistor made from two pn junctions connected back-to-back is a: C
9) This can be used to make a static memory cell: F
10) Unwanted variation in switching time: N

Answers to choose from

A. Thermal Noise
B. Voltage Reference
C. BJT
D. SRAM
E. Look-up Table
F. Cross-coupled inverters
G. LED
H. Electron Volt
I. Latchup
J. Transmission Gate
K. EPROM
L. Subthreshold Conduction
M. MOSFET
N. Jitter
O. Transconductance
P. Early Effect
Q. Bandgap
R. Mobility

Problem 3: (15 points)

Find the Q-points for M1 and M2 in the circuit below (I_D, V_{GS}, V_{DS}) AND operating mode, for $V_{TN} = 1$ V, $K_n = 1\text{x}10^{-3}$ A/V^2, and $\lambda = 0$ V^{-1}.

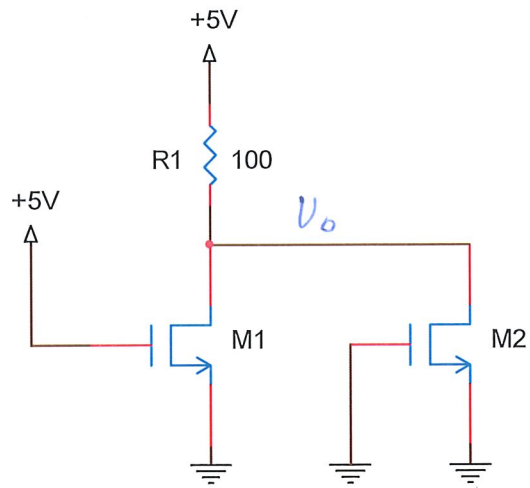

Assume Saturation for M_1

$\therefore I_D = \frac{1}{2}k_n(V_{GS}-V_{TN})^2 = \frac{1}{2}(1\times10^{-3})(5-1)^2 = 8\times10^{-3}A = 8mA$

$V_D = 5 - 100(8\times10^{-3}) = 4.2V = V_{DS}$

$V_{GS}-V_{TN} = 5-1 = 4V \rightarrow V_{DS} > V_{GS} > V_{TN} \Rightarrow \therefore$ Saturation

$M_2 \rightarrow V_{GS} = 0V \rightarrow$ off

M_1 Q-Point : $(I_D = 8mA,\ V_{GS} = 5V,\ V_{DS} = 4.2V) \rightarrow$ Saturation

M_2 Q-Point : $(I_D = 0A,\ V_{GS} = 0V,\ V_{DS} = 4.2V \rightarrow$ off

Problem 4: (15 points)

What is R_{on} for M1 in problem 3?

$M_1 \rightarrow$ in Saturation $\Rightarrow$ Cannot use $R_{on} = \frac{1}{K_n(V_{GS}-V_{TN})}$

$\therefore \quad R_{on} = \frac{V_{DS}}{I_D} = \frac{4.2}{8 \times 10^{-3}} = 525\,\Omega$

Problem 5: Consider the CMOS logic circuit below:

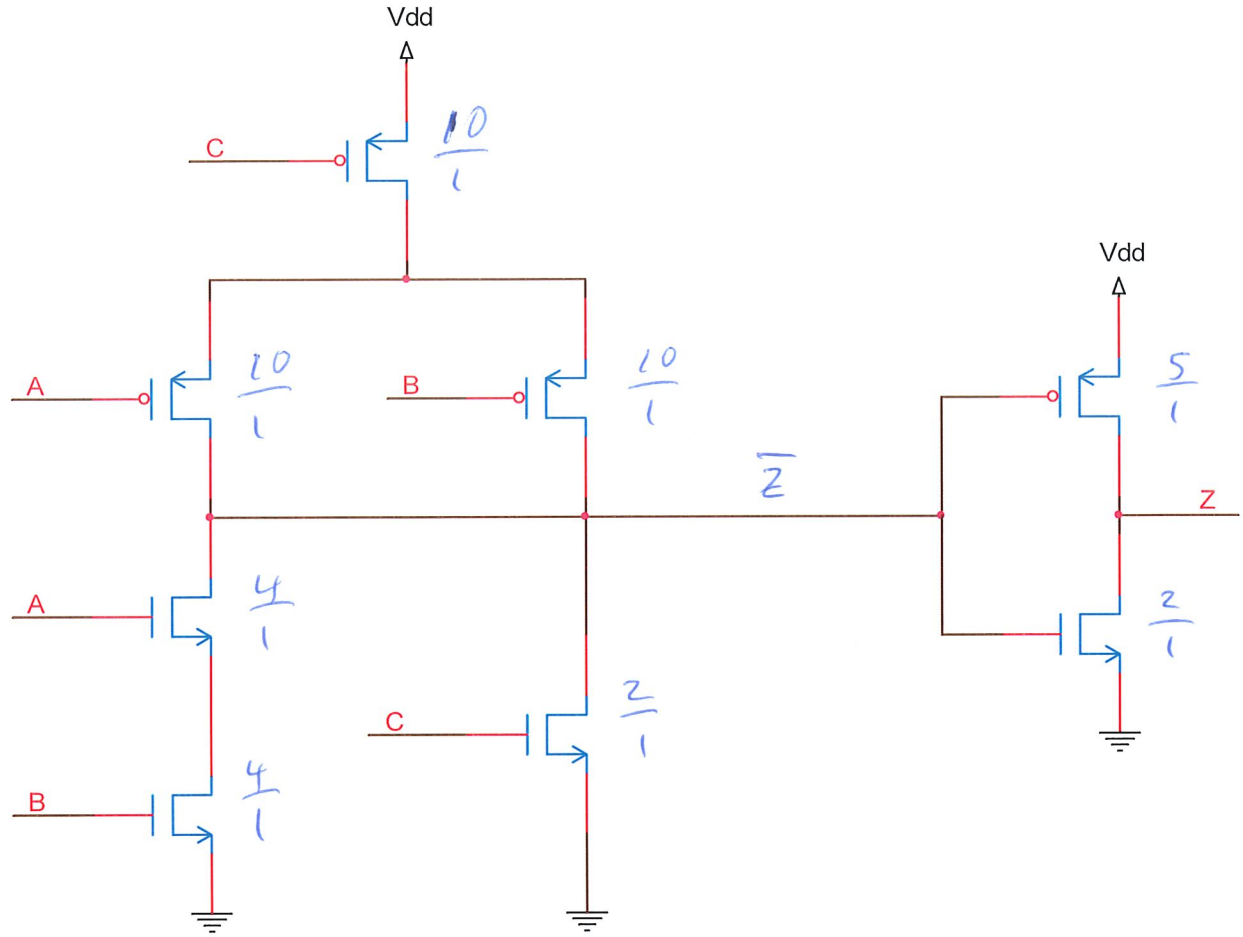

a. Compared to a standard CMOS inverter with $\left(\frac{W}{L}\right)_n = \left(\frac{2}{1}\right)$ and $\left(\frac{W}{L}\right)_p = \left(\frac{5}{1}\right)$, write the optimum $\left(\frac{W}{L}\right)$ ratio next to each transistor in the circuit above **(10 points)**.

b. What is the Boolean expression for Z in the circuit above **(10 points)**?

$Z = AB + C$

Problem 5: (15 points)

Find the BJT Q-Point, assuming Forward-Active Region of operation and $\beta_F = 100$.

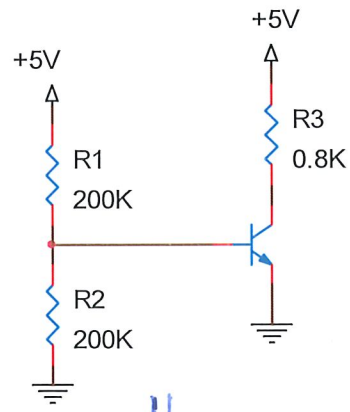

$$V_{Th} = \frac{5(200)}{200+200} = 2.5V$$

$$R_{Th} = 200k // 200k = 100k\Omega$$

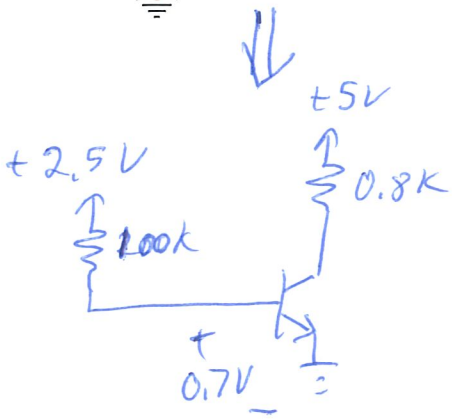

$$i_B = \frac{2.5-0.7}{100{,}000} = 18\mu A$$

$$i_C = \beta i_B$$
$$= 100(18\mu)$$
$$= 1.8\,mA$$

$$V_C = 5 - 800(1.8\times10^{-3}) = 3.56V = V_{CE}$$

Q-Point: $(i_C = 1.8mA,\ V_{CE} = 3.56V)$

Bonus Problem (10 points)

Draw a CMOS logic circuit to realize this Boolean expression: $Z = AB + C\overline{D}$. Do not put (W/L) ratios, just draw the circuit.

One way:

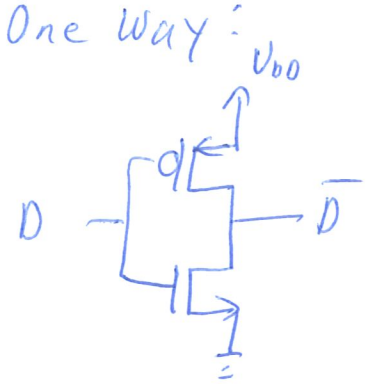

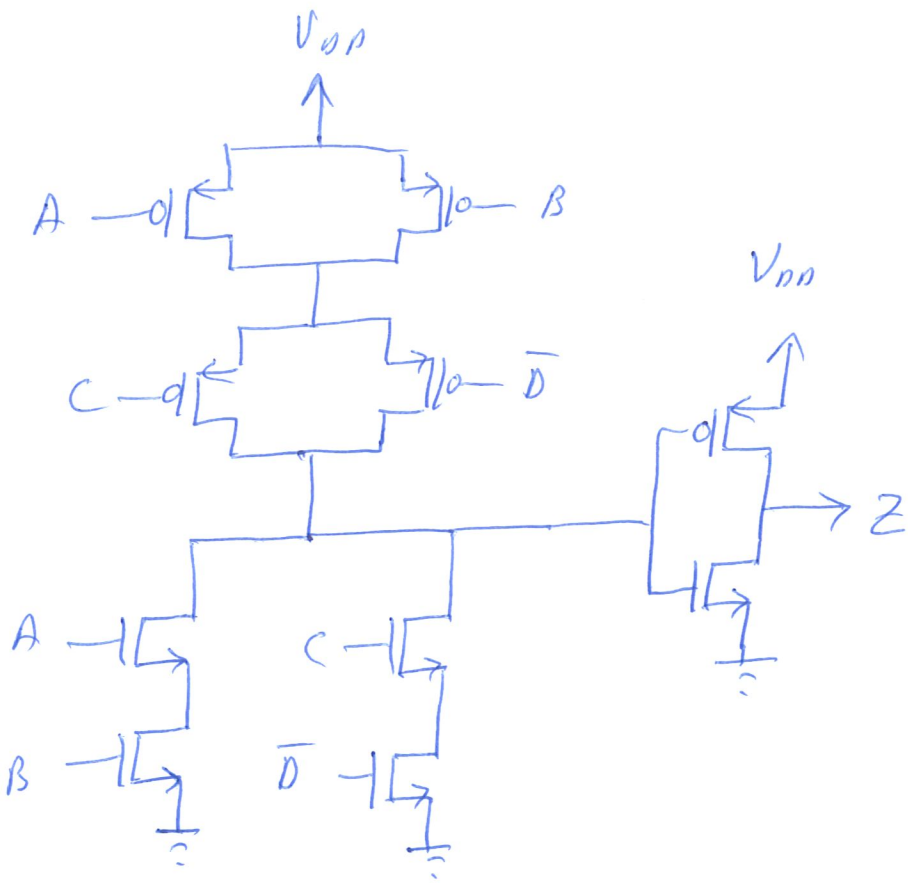

Blank sheet for Calculations