Parametric Fault Diagnosis of Nonlinear Analog Circuits using Polynomial Coefficients

Suraj Sindia
Analog Devices

Virendra Singh
Indian Institute of Science
Bangalore, India

Vishwani D. Agrawal
Auburn University
Auburn, AL, USA

23rd Intl. Conference on VLSI Design
Bangalore, India

Analog Circuit Testing

To determine catastrophic (open or short) faults and fractional deviations in circuit components from their nominal values.

Analog Circuit Testing

To determine catastrophic (open or short) faults and fractional deviations in circuit components from their nominal values.

In this talk

To propose a method to detect & diagnose fractional deviations of circuit components from their nominal values in a large class of circuits.

Outline

Motivation

Develop an Analog Circuit Test & Diagnosis Scheme

- Suitable for large class of circuits

Motivation

Develop an Analog Circuit Test & Diagnosis Scheme

- Suitable for large class of circuits
- Detects sufficiently small parametric faults

Motivation

Develop an Analog Circuit Test & Diagnosis Scheme

- Suitable for large class of circuits
- Detects sufficiently small parametric faults
- Small area overhead – requires little circuit augmentation

Motivation

Develop an Analog Circuit Test & Diagnosis Scheme

- Suitable for large class of circuits
- Detects sufficiently small parametric faults
- Small area overhead – requires little circuit augmentation
- Large number observables – handy in diagnosis

Motivation

Develop an Analog Circuit Test & Diagnosis Scheme

- Suitable for large class of circuits
- Detects sufficiently small parametric faults
- Small area overhead – requires little circuit augmentation
- Large number observables – handy in diagnosis

Previous Approaches

Important previous techniques

- I_{DDQ} based test – Intrusive, Area overhead is high *[Chakravarty '97]*
- Signal flow graph – Complexity order is high *[Bushnell et al. '97]*
- Transfer function based test – Valid only for LTI systems *[Savir and Guo '03]*
- Digital assisted analog test – Intrusive *[Tim Cheng et al. '06]*
- Polynomial coefficient based test – DC test *[Sindia et al. '09]*

Transfer Function Coefficient Based Test

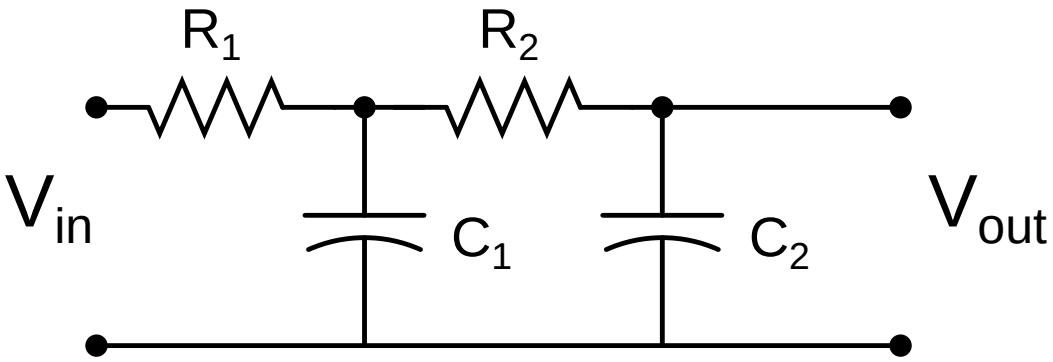

Second order low pass filter

$$H(s) = \frac{1}{(R_1 R_2 C_1 C_2)\, s^2 + (R_1 C_1 + (R_1 + R_2) C_2)\, s + 1}$$

Our Idea

Taylor series expansion of circuit function about $v_{in} = 0$ at Multi tones

$$v_{out} = f(v_{in})$$
$$v_{out} = f(0) + \frac{f'(0)}{1!}v_{in} + \frac{f''(0)}{2!}v_{in}^2 + \frac{f'''(0)}{3!}v_{in}^3 + \cdots + \frac{f^{(n)}(0)}{n!}v_{in}^n + \cdots$$

Our Idea

Taylor series expansion of circuit function about $v_{in} = 0$ at Multi tones

$$v_{out} = f(v_{in})$$
$$v_{out} = f(0) + \frac{f'(0)}{1!}v_{in} + \frac{f''(0)}{2!}v_{in}^2 + \frac{f'''(0)}{3!}v_{in}^3 + \cdots + \frac{f^{(n)}(0)}{n!}v_{in}^n + \cdots$$

Ignoring the higher order terms we have

$$v_{out} \approx a_0 + a_1 v_{in} + a_2 v_{in}^2 + \cdots + a_n v_{in}^n$$

where every $a_i \in \Re$ and is bounded between its extreme values for

$$a_{i,\min} < a_i < a_{i,\max} \; \forall i \; 0 \leq i \leq n$$

Our Idea (Contd..)

In a nutshell

- Find the V_{out} v/s V_{in} relationship at DC and "relevant" frequencies.

Our Idea (Contd..)

In a nutshell

- Find the V_{out} v/s V_{in} relationship at DC and "relevant" frequencies.
- Compute the coefficients of fault-free circuit

Our Idea (Contd..)

In a nutshell

- Find the V_{out} v/s V_{in} relationship at DC and "relevant" frequencies.
- Compute the coefficients of fault-free circuit
- Repeat the same for CUT by curve fitting the I/O response

Our Idea (Contd..)

In a nutshell

- Find the V_{out} v/s V_{in} relationship at DC and "relevant" frequencies.
- Compute the coefficients of fault-free circuit
- Repeat the same for CUT by curve fitting the I/O response
- Compare each of the obtained coefficients with fault-free circuit range

Our Idea (Contd..)

In a nutshell

- Find the V_{out} v/s V_{in} relationship at DC and "relevant" frequencies.
- Compute the coefficients of fault-free circuit
- Repeat the same for CUT by curve fitting the I/O response
- Compare each of the obtained coefficients with fault-free circuit range
- Classify CUT as Good or Bad

Cascaded Amplifiers

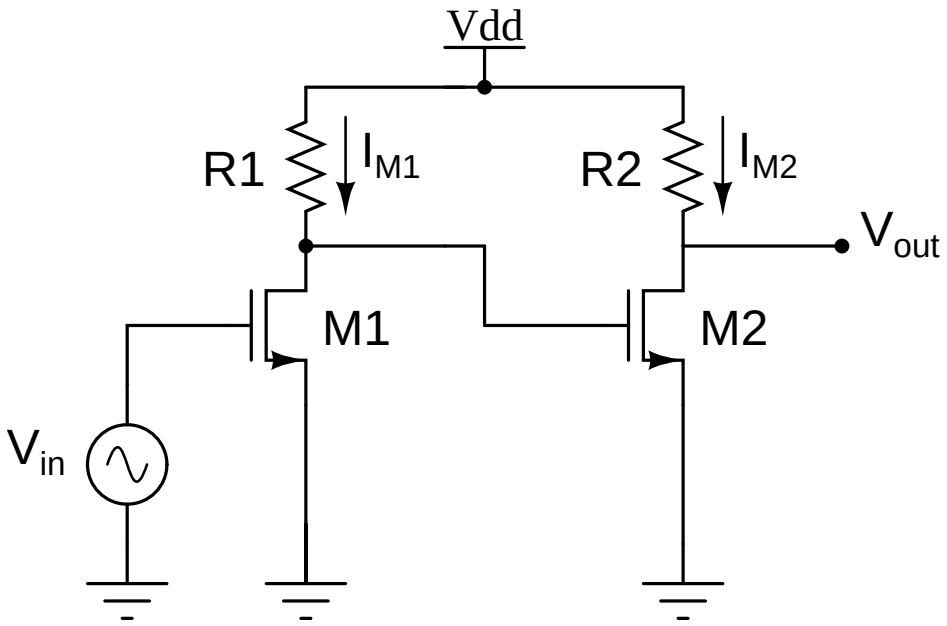

Two stage amplifier with 4th degree non-linearity in V_{in}

$$v_{out} = a_0 + a_1 v_{in} + a_2 v_{in}^2 + a_3 v_{in}^3 + a_4 v_{in}^4$$

Polynomial Coefficients

$$a_0 = V_{DD} - R_2 K \left(\frac{W}{L}\right)_2 \left[\begin{array}{l} (V_{DD} - V_T)^2 + R_1^2 K^2 \left(\frac{W}{L}\right)_1^2 V_T^4 \\ -2(V_{DD} - V_T) R_1 \left(\frac{W}{L}\right)_1 V_T^2 \end{array} \right]$$

$$a_1 = R_2 K \left(\frac{W}{L}\right)_2 \left[4R_1^2 K^2 \left(\frac{W}{L}\right)_1^2 V_T^3 + 2(V_{DD} - V_T) R_1 K \left(\frac{W}{L}\right)_1 V_T \right]$$

$$a_2 = R_2 K \left(\frac{W}{L}\right)_2 \left[2(V_{DD} - V_T) R_1 K \left(\frac{W}{L}\right)_1 - 6R_1^2 K^2 \left(\frac{W}{L}\right)_1^2 V_T^2 \right]$$

$$a_3 = 4V_T K^3 \left(\frac{W}{L}\right)_1^2 \left(\frac{W}{L}\right)_2^2 R_1^2 R_2$$

$$a_4 = -K^3 \left(\frac{W}{L}\right)_1^2 \left(\frac{W}{L}\right)_2^2 R_1^2 R_2$$

MSDF Calculation

Definition

Minimum Size Detectable Fault(ρ) of a circuit parameter is defined as its minimum fractional deviation to force atleast one of the polynomial coefficients out of its fault free range

MSDF Calculation

Definition

Minimum Size Detectable Fault(ρ) of a circuit parameter is defined as its minimum fractional deviation to force atleast one of the polynomial coefficients out of its fault free range

Overview of MSDF calculation of R1 with $\mathrm{V_{DD}}$=1.2V, $\mathrm{V_T}$= 400mV, $\left(\frac{W}{L}\right)_1 = \frac{1}{2}\left(\frac{W}{L}\right)_2 = 20$, and $\mathrm{K} = 100\mu\mathrm{A/V^2}$

MSDF Calculation

Definition

Minimum Size Detectable Fault(ρ) of a circuit parameter is defined as its minimum fractional deviation to force atleast one of the polynomial coefficients out of its fault free range

Overview of MSDF calculation of R1 with $\mathrm{V_{DD}}$=1.2V, $\mathrm{V_T}$= 400mV, $\left(\frac{W}{L}\right)_1 = \frac{1}{2}\left(\frac{W}{L}\right)_2 = 20$, and $\mathrm{K} = 100\mu\mathrm{A/V^2}$

Maximize a_0

$$\left\{1.2 - R_{2,nom}(1+y)\left(\begin{array}{l} 2.56\mathrm{x}10^{-3} + R_{1,nom}^2(1+x)^2 1.024\mathrm{x}10^{-7} \\ -5.12\mathrm{x}10^{-4} R_{1,nom}(1+x) \end{array}\right)\right\}$$

subject to a_1, a_2, a_3, a_4 being in their fault free ranges and

$$-\alpha \leq x, y \leq \alpha$$

MSDF Calculation (contd..)

Assuming single parametric faults, ρ for R_1

$$\rho = (1-\alpha)^{1.5} - 1 \approx 1.5\alpha - 0.375\alpha^2$$

MSDF Calculation (contd..)

Assuming single parametric faults, ρ for R_1

$$\rho = (1-\alpha)^{1.5} - 1 \approx 1.5\alpha - 0.375\alpha^2$$

MSDF for Cascaded Amplifier with α = 0.05

Circuit parameter	%upside MSDF	%downside MSDF
Resistor R_1	10.3	7.4
Resistor R_2	12.3	8.5

Let us Generalize

Generalization – Fault Simulation

1. Start
2. Choose frequency for fault simulation
3. Apply sweep to input and note corresponding output voltage levels
4. Polynomial Curve fit the obtained I/O data – find the coefficient values of fault free circuit
5. Simulate for all parametric faults at the simplex of hypercube
6. Find min-max values of each coefficient (C_i) from $i = 1 \cdots N$ across all simulations
7. Repeat process at all chosen frequencies
8. Stop

Generalization – Test Procedure

1. Start
2. Choose a frequency
3. Sweep input and note corresponding output voltage levels
4. Polynomial Curve fit the obtained I/O data. Obtain coefficients $C_i \; \forall \; i = 1 \cdots N$
5. Start with first coefficient
6. Consider next coefficient C_{i+1}
7. $|C_i| > |C_{i,max}| \; or \; |C_i| < |C_{i,min}|$?
   If True go to step 11
8. $i < N$? If True go to step 6
9. Repeat steps 2–8 at all desired frequencies
10. Subject CUT to further tests. Stop
11. CUT is faulty. Stop

Results – Elliptic filter

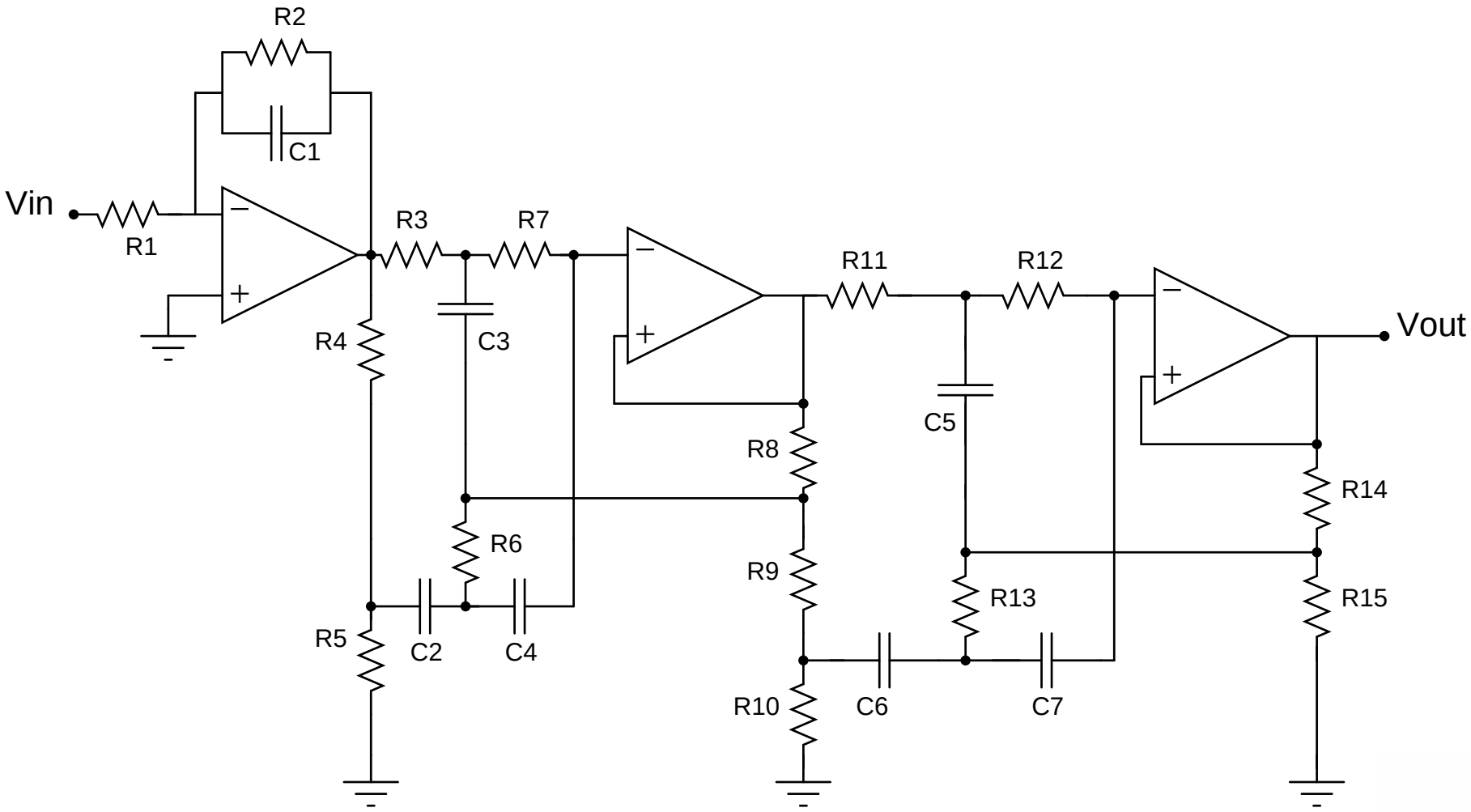

Results - Curve fitting at DC

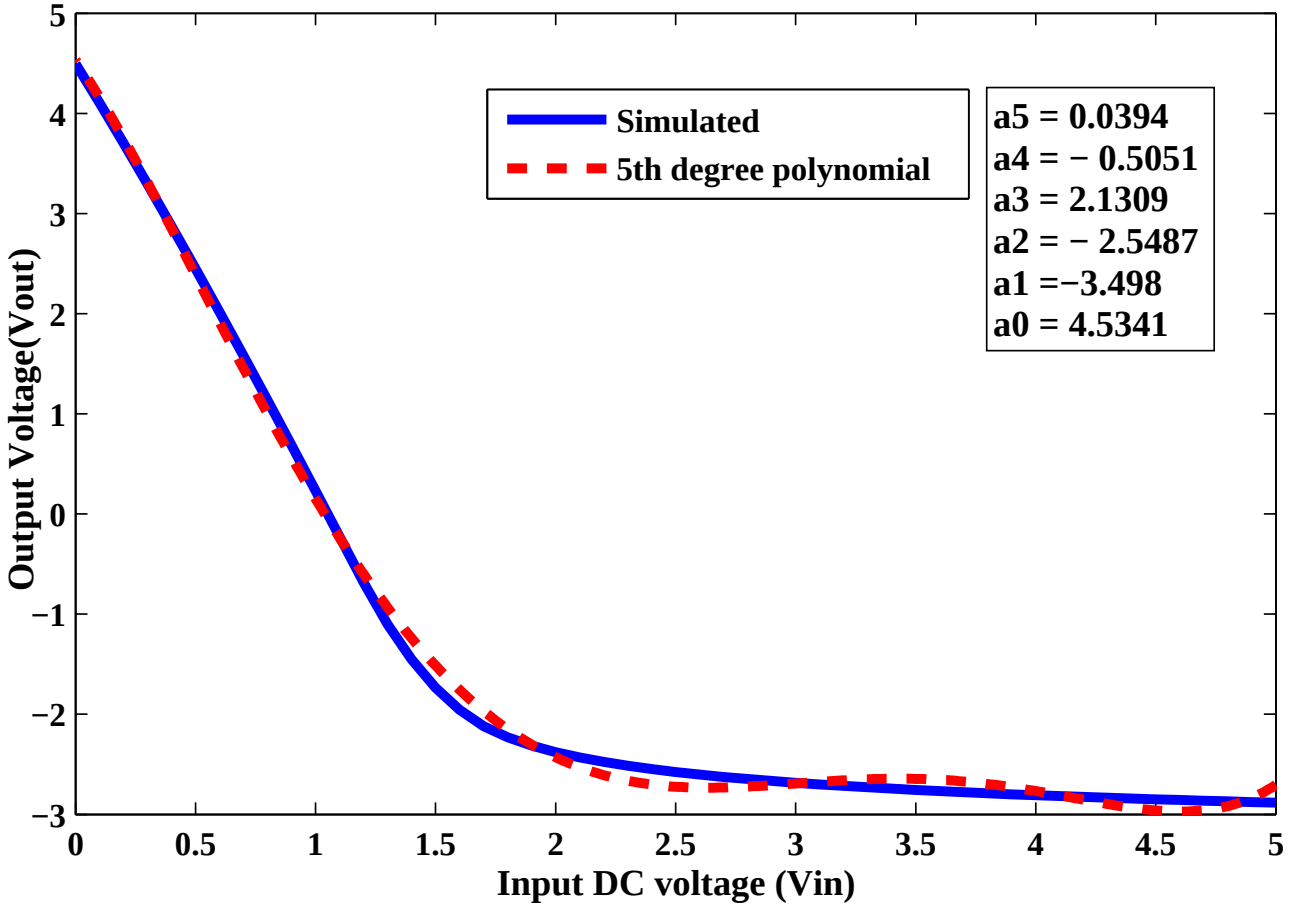

$$v_{out} = 4.5341 - 3.498 v_{in} - 2.5487 v_{in}^2 + 2.1309 v_{in}^3 - 0.50514 v_{in}^4 + 0.039463 v_{in}^5$$

Results - Curve fitting at 100Hz

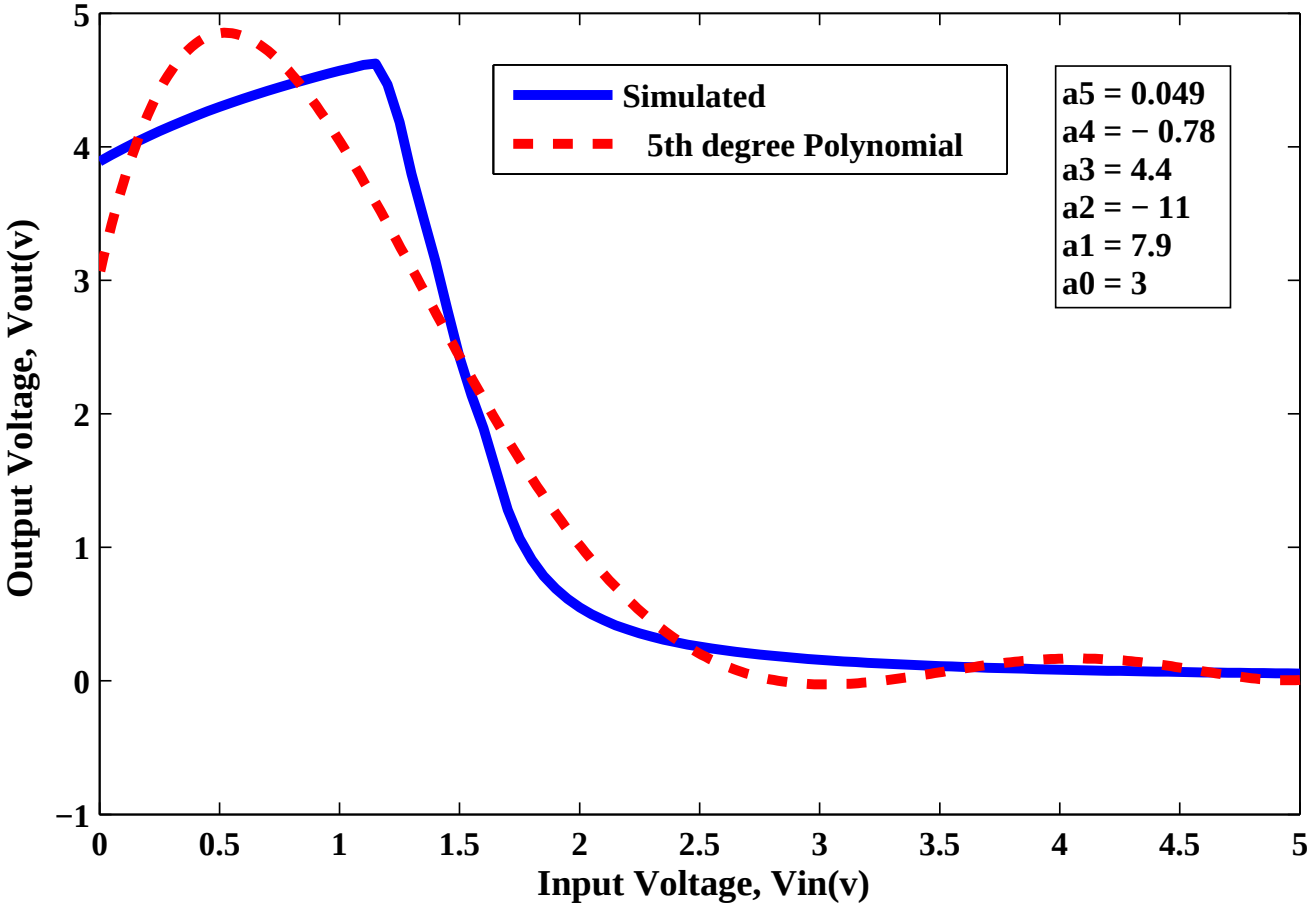

$$v_{out} = 3 - 7.9v_{in} - 11v_{in}^2 + 4.4v_{in}^3 - 0.78v_{in}^4 + 0.049v_{in}^5$$

Results - Curve fitting at 900Hz

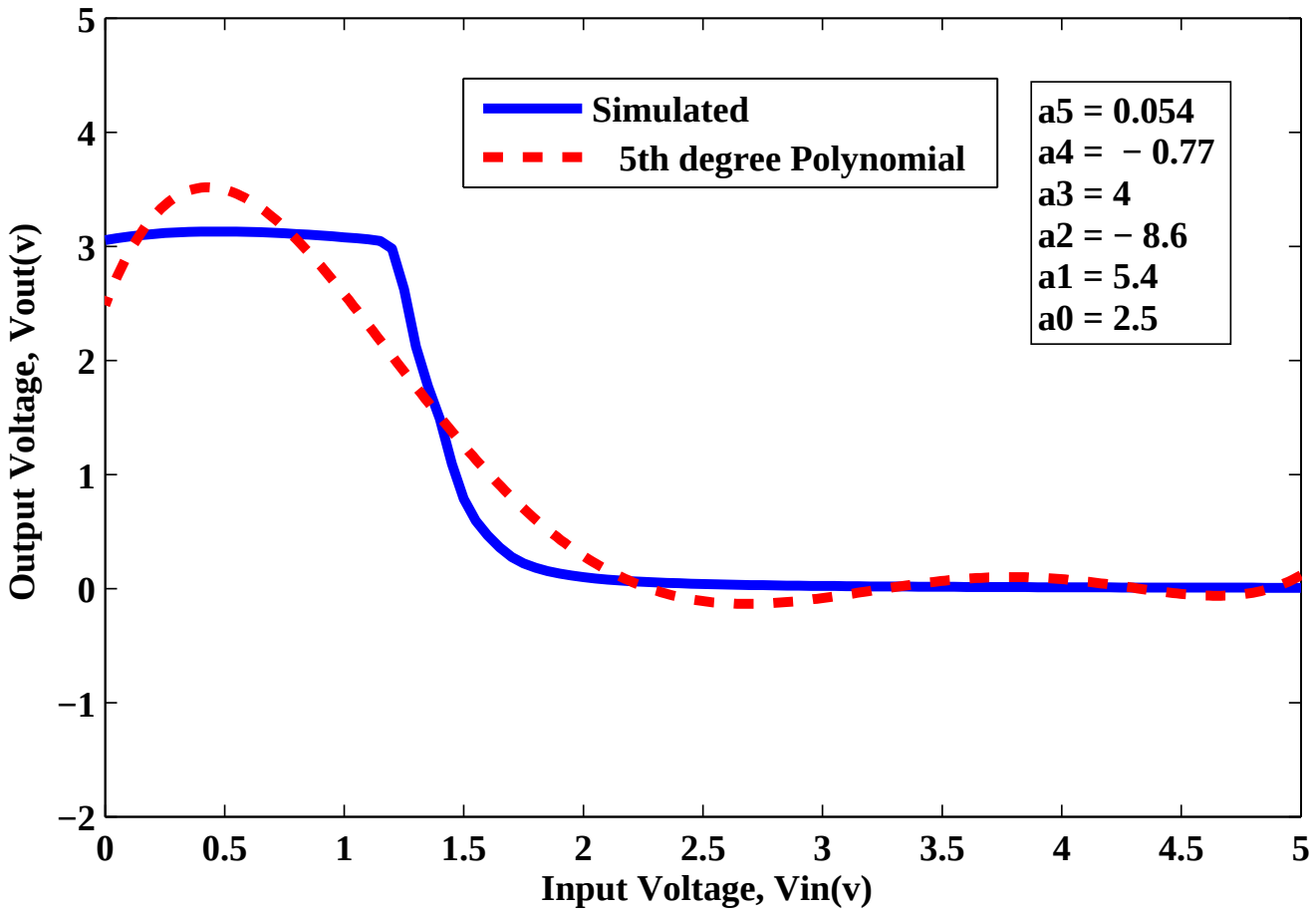

$$v_{out} = 2.5 + 5.4v_{in} - 8.6v_{in}^2 + 4v_{in}^3 - 0.77v_{in}^4 + 0.054v_{in}^5$$

Results - Curve fitting at 1000Hz

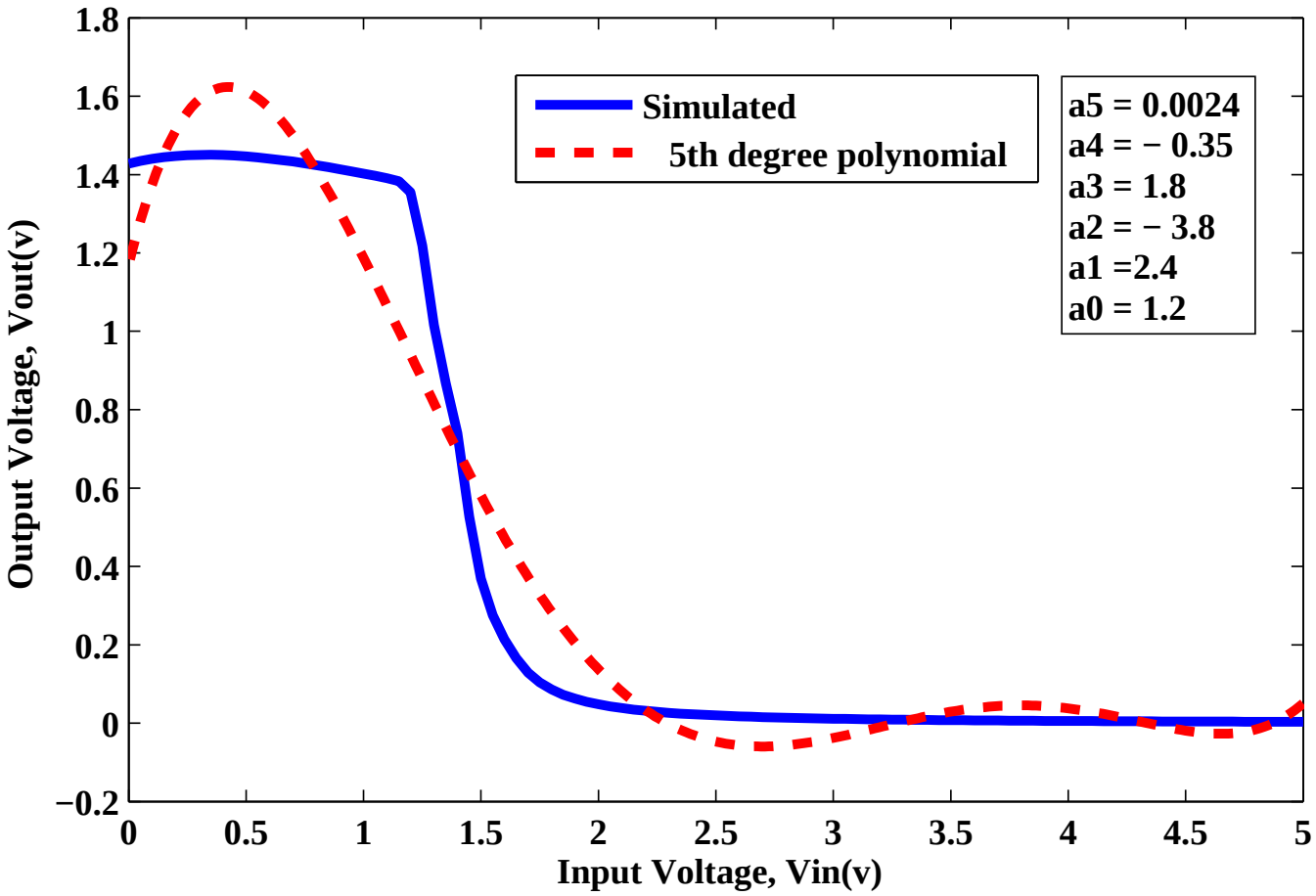

$$v_{out} = 1.2 + 2.4v_{in} - 3.9v_{in}^2 + 1.8v_{in}^3 - 0.35v_{in}^4 + 0.024v_{in}^5$$

Results - Curve fitting at 1100Hz

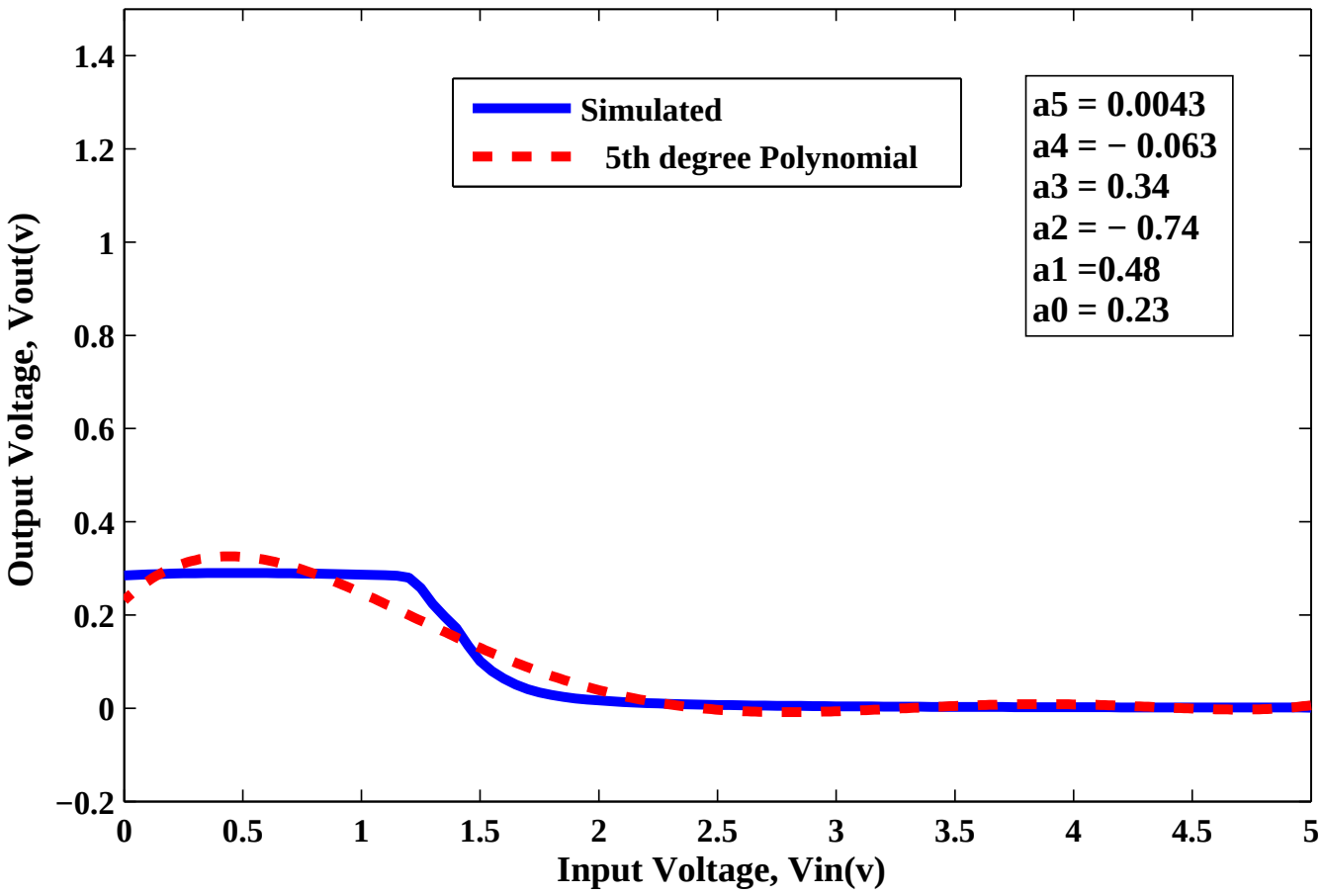

$$v_{out} = 0.23 - 0.48v_{in} - 0.74v_{in}^2 + 0.34v_{in}^3 - 0.063v_{in}^4 + 0.0043v_{in}^5$$

Results at 1000Hz – Elliptic filter

Parameter Combinations Leading to Max Values of Coefficients with α = 0.05 at 1000Hz

Circuit Parameters (Resistance in ohm,Capacitance in farad)						
Nominal Values	a_0	a_1	a_2	a_3	a_4	a_5
$R_1 = 19.6k$	18.6k	18.6k	20.5k	20.5k	20.5k	18.6k
$R_2 = 196k$	205k	205k	205k	205k	186k	186k
$R_3 = 147k$	139k	139k	154k	139k	139k	139k
$R_4 = 1k$	950	950	1.05k	1.05k	1.05k	1.05k
$C_4 = 2.67n$	2.5n	2.8n	2.5n	2.5n	2.5n	2.5n
$C_5 = 2.67n$	2.5n	2.5n	2.5n	2.5n	2.5n	2.8n
$C_6 = 2.67n$	2.5n	2.8n	2.5n	2.8n	2.5n	2.8n
$C_7 = 2.67n$	2.5n	2.8n	2.8n	2.8n	2.8n	2.5n

Results at 1000Hz – Elliptic filter

Parameter Combinations Leading to Min Values of Coefficients with α = 0.05 at 1000Hz

Circuit Parameters (Resistance in ohm,Capacitance in farad)						
Nominal Values	a_0	a_1	a_2	a_3	a_4	a_5
$R_1 = 19.6k$	18.6k	18.6k	18.6k	18.6k	20.5k	20.5k
$R_2 = 196k$	205k	186k	186k	205k	205k	205k
$R_3 = 147k$	139k	139k	154k	139k	139k	139k
$R_4 = 1k$	1.05k	950	1.05k	950	950	1.05k
$C_4 = 2.67n$	2.5n	2.5n	2.8n	2.5n	2.5n	2.8n
$C_5 = 2.67n$	2.8n	2.8n	2.8n	2.8n	2.8n	2.8n
$C_6 = 2.67n$	2.5n	2.5n	2.8n	2.8n	2.8n	2.5n
$C_7 = 2.67n$	2.8n	2.5n	2.5n	2.5n	2.5n	2.8n

Fault Detection at Multi-Tones

Injected fault	Coefficients out of Bounds at				Detect
	DC	f_1=100Hz	f_2=900Hz	f_3=1000Hz	
R_1 down 15%	$a_0 - a_4$	$a_1 - a_4$	a_3, a_5	a_2, a_4	Yes
R_2 down 5%	a_2, a_5	a_1, a_3	a_1, a_5	a_1, a_2, a_5	Yes
R_3 up 10%	a_1, a_2, a_3	a_3, a_5	a_0, a_3, a_4	a_1, a_3, a_4	Yes
R_4 down 20%	$a_0 - a_3$	$a_1 - a_2$	a_2, a_3	a_1, a_2, a_3	Yes
C_5 up 5%	–	a_0, a_1	a_1, a_5	a_1, a_2	Yes
C_6 up 15%	–	a_3, a_4	a_1, a_2, a_4	a_3, a_4, a_5	Yes
C_7 up 15%	–	a_1, a_4	a_1, a_3, a_4	a_1, a_3, a_5	Yes

Fault Diagnosis

Definition

To determine the circuit parameters responsible for deviation of circuit from its desired behavior.

Fault Diagnosis

Definition

To determine the circuit parameters responsible for deviation of circuit from its desired behavior.

Sensitivity based diagnosis

$$S_{p_k}^{C_i} = \frac{p_k}{C_i}\frac{\partial C_i}{\partial p_k}$$

$$\mathrm{P}(\delta \mathrm{p_k} | \delta \mathrm{C_i}) = \phi\left(\frac{S_{p_k}^{C_i}\delta p_k}{\delta C_i}\right)$$

ϕ is any probability measure. We chose negative exponential function.

Fault Diagnosis

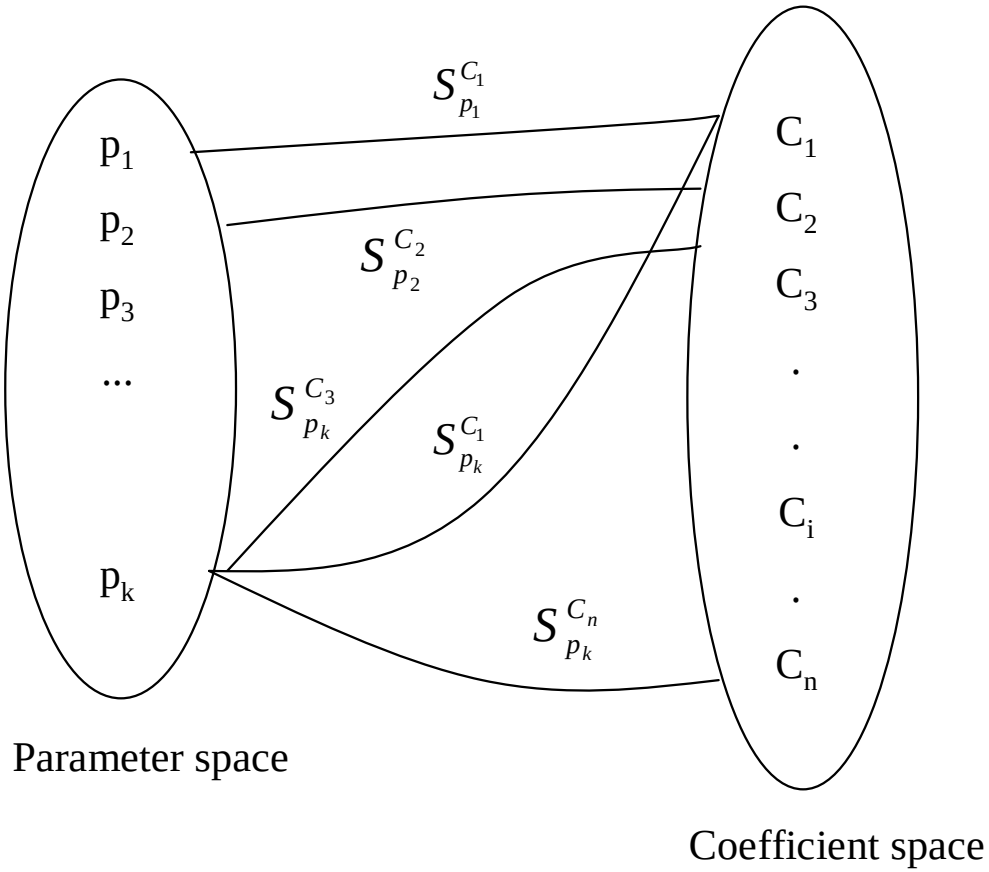

$$P(p_k \text{ is a fault site} \mid C_i \text{ is out of bound}) = 1 - \prod_{j=1}^{N} \left(1 - P_{f_j}\left(\delta p_k \mid \delta C_i\right)\right)$$

Fault Diagnosis at Multi-Tones for Elliptic Filter

Parametric Fault Diagnosis with Confidence Levels $\approx$ 98.9%

Injected fault	Diagnosed fault sites at				Deduction
	DC	100Hz	900Hz	1000Hz	
R_1 down 15%	R_1, R_4	R_1	R_1, R_2	R_1, R_2, C_1	R_1
R_2 down 5%	R_2	R_2, C_1	R_2, R_3, C_1	R_2, R_3	R_2
R_3 up 10%	R_1, R_3	R_3, C_3	R_3, R_4, C_3	R_3	R_3
R_4 down 20%	R_1, R_4	R_1, R_4	R_2, R_4, C_1	R_1, R_2, R_4	R_4
C_5 up 5%	–	C_5	R_{12}, C_5	C_5	C_5
C_6 up 15%	–	R_{10}, C_6	C_6, C_7	C_6, C_7	C_6
C_7 up 15%	–	C_6, C_7	C_7	C_6, C_7	C_7

Conclusion

- Technique for parametric fault detection in analog circuits – faults as small as 10% were uncovered in elliptic filter

Conclusion

- Technique for parametric fault detection in analog circuits – faults as small as 10% were uncovered in elliptic filter
- Could uncover parametric deviations in reactive elements as input is swept at DC and selected frequencies

Conclusion

- Technique for parametric fault detection in analog circuits – faults as small as 10% were uncovered in elliptic filter
- Could uncover parametric deviations in reactive elements as input is swept at DC and selected frequencies
- Technique to diagnose faults through multi-frequency excitation using sensitivity as a measure

Conclusion

- Technique for parametric fault detection in analog circuits – faults as small as 10% were uncovered in elliptic filter
- Could uncover parametric deviations in reactive elements as input is swept at DC and selected frequencies
- Technique to diagnose faults through multi-frequency excitation using sensitivity as a measure

Future Work

- Increasing the sensitivity of coefficients to parameters (to enhance coverage & fault diagnosis), using “V-transforms”

Future Work

- Increasing the sensitivity of coefficients to parameters (to enhance coverage & fault diagnosis), using “V-transforms”
- Techniques for optimal choice of frequencies at which CUT can be excited

Acknowledgments

- Kaushal Kumar Jha, ADI
- Pawan Kumar, IISc
- Pramod Subramanyan, IISc

Thanks for your Attention!