Testing Linear and Non-Linear Analog Circuits Using Moments

Suraj Sindia Vishwani D. Agrawal
Dept. of ECE, Auburn University, AL, USA

Virendra Singh
Indian Institute of Science, Bangalore, India

March 28, 2011

Outline

Outline

Ideal Test For An Analog Circuit

Wish list for an analog circuit test scheme

- Suitable for large class of circuits
- Detects sufficiently small parametric faults – high sensitivity
- Small area overhead – requires little circuit augmentation
- Large number observables – handy in diagnosis
- Low test time

Ideal Test For An Analog Circuit

Wish list for an analog circuit test scheme

- Suitable for large class of circuits
- Detects sufficiently small parametric faults – high sensitivity
- Small area overhead – requires little circuit augmentation
- Large number observables – handy in diagnosis
- Low test time
- Low design complexity of the input signal

In This Talk

Problem statement

Evaluate probability moments of output as a metric for testing analog circuits with Gaussian noise as the input excitation

- Gaussian noise as input has minimum design effort

Outline

Basic Idea

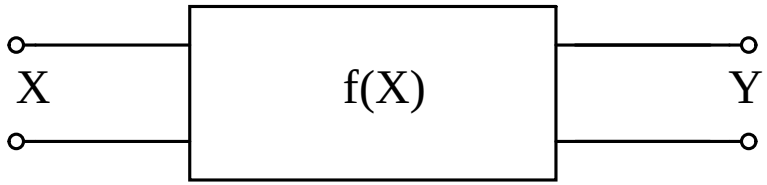

Random Variable Transformation

Premise

- Circuit is a function $f(.)$ transforming random variable X to a random variable Y.
  This implies circuit can be characterized by the statistics of output(Y), such as probability density function and moments for a given input random variable probability distribution.
- Circuit specifications can be related to moments.

Probability Moment

Definition

Probability moment of a random variable

The nth moment, μ_n for all $n = 1 \cdots N$ of a continuous random variable $X \geq 0$, and having a pdf given by $f(X)$, is defined as

$$\mu_n = \int_{X=0}^{\infty} X^n f(X) \, \mathrm{d}X$$

Probability Moment

A Quick Example

Calculating probability moment of a random variable

Let $f(X) = e^{-X}$ for all $X \geq 0$

Probability Moment

A Quick Example

Calculating probability moment of a random variable

Let $f(X) = e^{-X}$ for all $X \geq 0$

The nth moment of X, μ_n for all $n = 1 \cdots N$

$$\begin{aligned} \mu_n &= \int_0^\infty X^n f(X)\,\mathrm{d}X \\ &= \int_0^\infty X^n e^{-X}\,\mathrm{d}X \\ &= \Gamma(n+1) = n! \end{aligned}$$

$$\implies \mu_1 = 1, \mu_2 = 2, \mu_3 = 6, \mu_4 = 24, \cdots$$

Minimum Size Detectable Fault (MSDF)

Definition

Definition

Minimum size detectable fault (ρ) of a circuit parameter is defined as the minimum fractional deviation that forces at least one of the moments out of its fault free range.

Minimum Size Detectable Fault (MSDF)

Definition

Definition

Minimum size detectable fault (ρ) of a circuit parameter is defined as the minimum fractional deviation that forces at least one of the moments out of its fault free range.

Minimum fractional deviation, ρ, in a circuit element, of nominal value g, such that $g \rightarrow g(1 \pm \rho)$, causes, at least one of the moments, μ_i to violate the following inequality

$$\mu_{i,\text{min}} < \mu_i < \mu_{i,\text{max}} \quad \forall \mu_i,\ 1 \leq i \leq n$$

RC Filter

MSDF Calculation - An Example

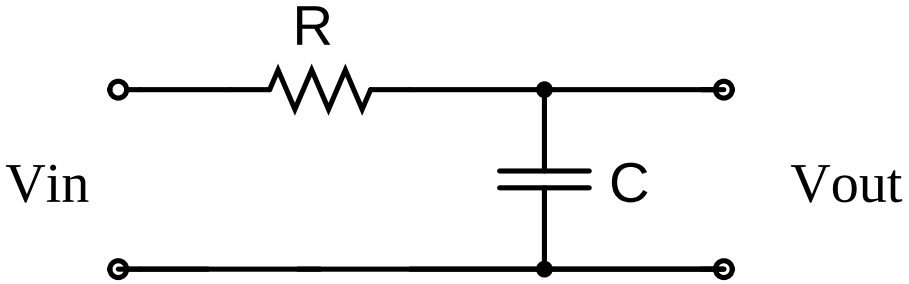

RC Filter

MSDF Calculation - An Example

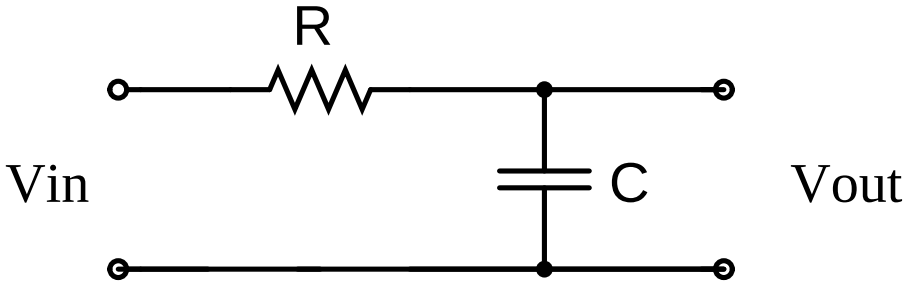

$$\mu_2 = \frac{N_o \pi}{4RC}$$

N_o: Input noise power spectral density, R: Resistance,
C: Capacitance.
For a fractional deviation ρ in R, such that $\overline{\mu_2} - \mu_2 \geq \mu_0$, gives

RC Filter

MSDF Calculation - An Example

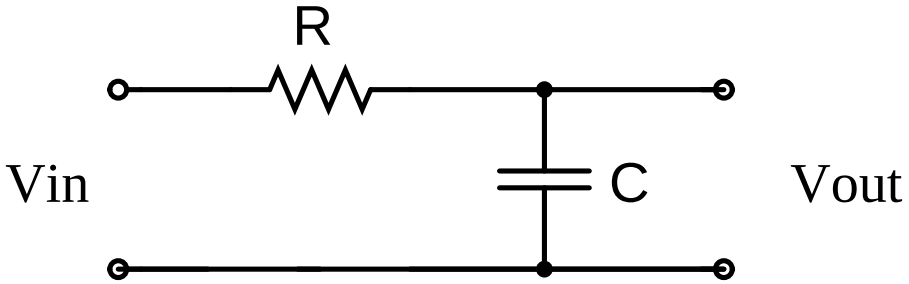

$$\mu_2 = \frac{N_o \pi}{4RC}$$

N_o: Input noise power spectral density, R: Resistance, C: Capacitance.

For a fractional deviation ρ in R, such that $\overline{\mu_2} - \mu_2 \geq \mu_0$, gives

$$\rho = \frac{4\mu_0 CR}{N_o \pi - 4\mu_0 CR}$$

Outline

Test Setup

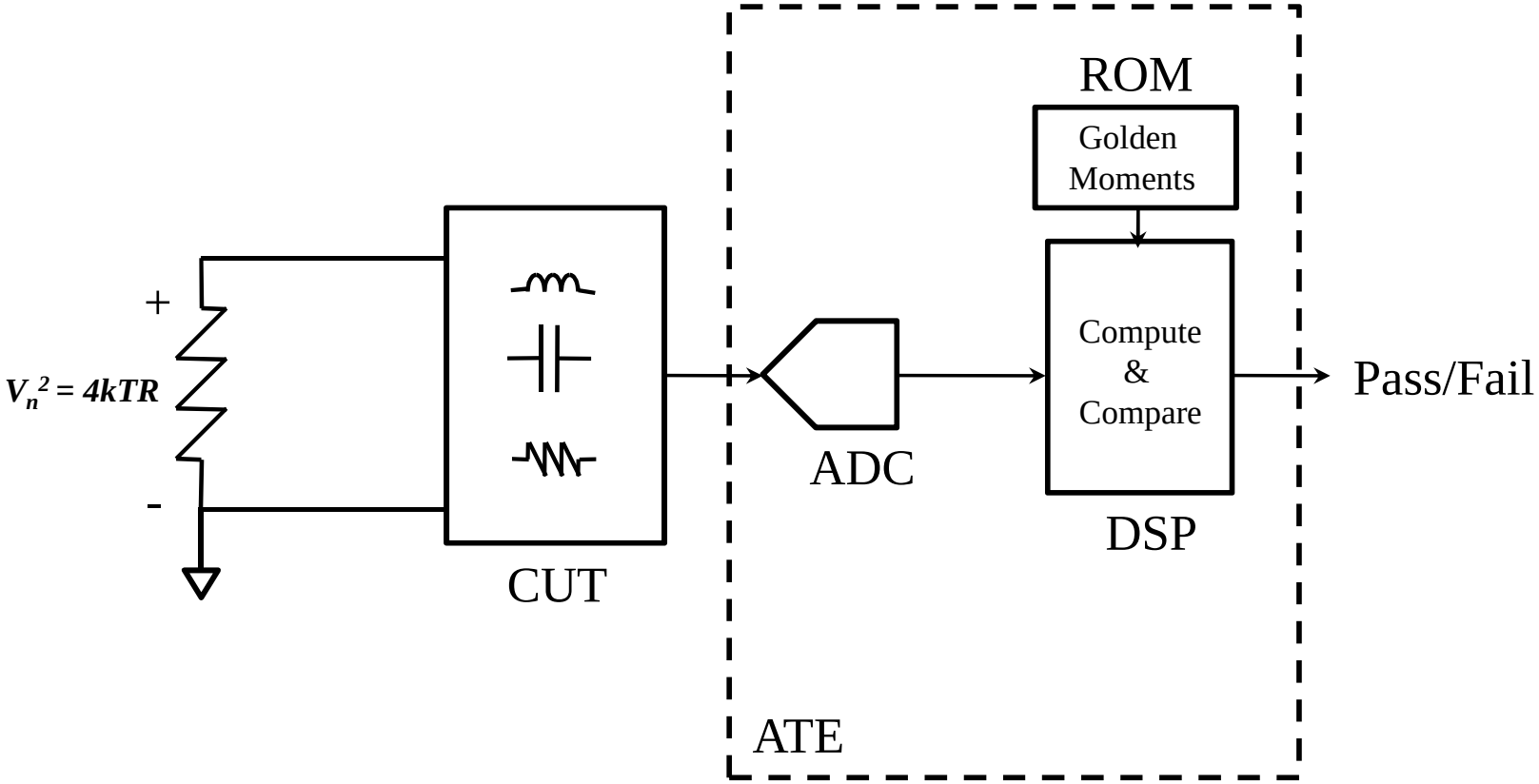
+
$V_n^2 = 4kTR$
-
CUT
ROM
Golden Moments
ADC
Compute & Compare
DSP
ATE
Pass/Fail

Fault Simulation

1. Start
2. Apply inputs, sampled from a Gaussian probability density function
3. Record output values for each of these inputs and estimate the output probability density function (PDF)
4. Compute moments(μ_i) of the estimated PDF up to the desired order (say N)
5. Repeat steps 1-3, with circuit component values sampled uniformly in their fault free tolerance range
6. Find min-max values of each moment (μ_i) from $i = 1 \cdots N$ across all simulations
7. Stop

Test Procedure

1. Start
2. Apply inputs, sampled from a Gaussian probability density function
3. Record output values for each of these inputs and estimate the output probability density function (PDF)
4. Compute the moments of the estimated output PDF
5. $\mu_i > \mu_{i,max}$ or $\mu_i < \mu_{i,min}$. Yes or No ?
6. If yes, conclude circuit under test is faulty. If not, repeat the test for next moment
7. If all coefficients are inside the bounds, subject circuit under test to further tests. Stop

Outline

Results – Benchmark Elliptic Filter

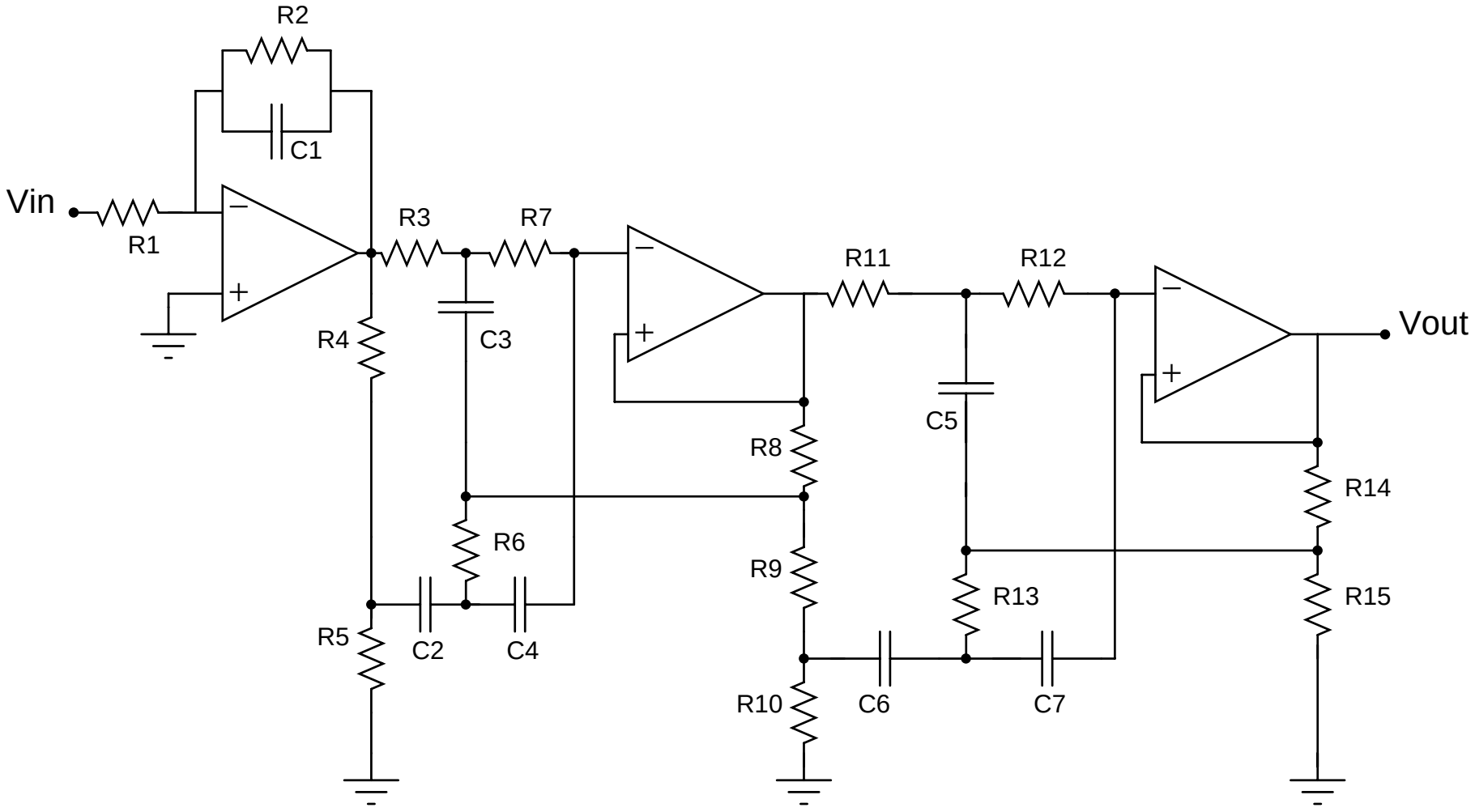

Results

Elliptic Filter - Fault Simulation

Parameter combinations leading to maximum values of moments with γ = 0.05

Circuit Parameter (ohm, nF)	μ_1	μ_2	μ_3	μ_4	μ_5	μ_6
$R_1 = 19.6k$	19.6k	20.58k	19.6k	20.58k	20.58k	18.62k
$R_2 = 196k$	186.2k	205.8k	205.8k	205.8k	186.2k	186.2k
$R_3 = 147k$	139.65k	147k	139.65k	139.65k	154.35k	147k
$R_4 = 1k$	1050	1050	950	1000	1050	950
$R_5 = 71.5$	75.075	67.925	75.075	71.5	75.075	67.925
$R_6 = 37.4k$	37.4k	37.4k	37.4k	39.27k	39.27k	37.4k
$R_7 = 154k$	154k	154k	154k	146.3k	154k	154k
$C_3 = 2.67$	2.8035	2.8035	2.67	2.5365	2.5365	2.5365
$C_4 = 2.67$	2.8035	2.67	2.5365	2.67	2.5365	2.67
$C_5 = 2.67$	2.8035	2.67	2.8035	2.5365	2.5365	2.67
$C_6 = 2.67$	2.8035	2.5365	2.8035	2.5365	2.67	2.8035
$C_7 = 2.67$	2.67	2.5365	2.8035	2.8035	2.67	2.5365

Results

Elliptic Filter - Fault Simulation

Parameter combinations leading to minimum values of moments with γ = 0.05

Circuit Parameter (ohm, nF)	μ_1	μ_2	μ_3	μ_4	μ_5	μ_6
$R_1 = 19.6k$	19.6k	18.62k	19.6k	19.6k	19.6k	20.58k
$R_2 = 196k$	205.8k	205.8k	205.8k	196k	186.2k	205.8k
$R_3 = 147k$	147k	154.35k	154.35k	139.65k	154.35k	154.35k
$R_4 = 1k$	950	1000	1050	950	1050	950
$R_5 = 71.5$	67.925	71.5	75.075	75.075	67.925	71.5
$R_6 = 37.4k$	39.27k	37.4k	35.53k	39.27k	35.53k	35.53k
$R_7 = 154k$	146.3k	161.7k	154k	161.7k	154k	154k
$C_3 = 2.67$	2.8035	2.8035	2.8035	2.8035	2.5365	2.8035
$C_4 = 2.67$	2.8035	2.8035	2.8035	2.8035	2.8035	2.67
$C_5 = 2.67$	2.67	2.8035	2.67	2.8035	2.8035	2.67
$C_6 = 2.67$	2.8035	2.5365	2.8035	2.5365	2.67	2.8035
$C_7 = 2.67$	2.67	2.5365	2.8035	2.67	2.67	2.8035

Results

Elliptic Filter - Fault Detection

Fault detection for some injected faults

Circuit Parameter	Out of bound moment	Fault detected?
R_1 down 12%	μ_3, μ_1	Yes
R_2 down 10%	μ_4	Yes
R_3 up 12%	μ_1, μ_2	Yes
R_5 up 10%	μ_4	Yes
R_7 up 15%	μ_5, μ_6	Yes
R_{11} up 15%	μ_3	Yes
R_{12} down 15%	μ_2, μ_6	Yes
C_4 up 12%	μ_4	Yes
C_5 down 15%	μ_1, μ_6	Yes

Conclusion

Conclusion

- Circuit test using probability moments of the output as the test metric was investigated
- Test procedure was implemented on an elliptic filter, with detection of fault sizes $\approx 12\%$

Open Questions

Possible directions for future work

- Optimal order N of moment expansion
- Fault diagnosis using moments
- Other noise distributions for input excitation