Proc. 12th IEEE Latin American Test Workshop (LATW11), March 2011

Testing Linear and Non-Linear Analog Circuits using Moment Generating Functions

Suraj Sindia*, Vishwani D. Agrawal†
Department of Electrical and Computer Engineering
Auburn University, Alabama, AL, USA
*Email: szs0063@auburn.edu
†Email: vagrawal@eng.auburn.edu

Virendra Singh
Supercomputer Education
and Research Centre
Indian Institute of Science, Bangalore, India
Email: viren@serc.iisc.ernet.in

***Abstract*—Circuit under test (CUT) is treated as a transformation on the probability density function of its input excitation, which is, a continuous random variable (RV) of gaussian probability distribution. Probability moments of the output, which is now the transformed RV, is used as a metric for testing catastrophic and parametric faults in circuit components that make up the CUT. Use of probability moments as circuit test metric with white noise excitation as input addresses three important problems faced in analog circuit test, namely: 1) Reduces complexity of input signal design, 2) Increases resolution of fault detection, and 3) Reduces production test cost as it has no area overhead and marginally reduces test time. We develop the theory, test procedure and report SPICE simulation results of the proposed scheme on a benchmark elliptic filter. With the proposed scheme, we are able to detect all catastrophic faults and single parametric faults that are off from their nominal value by just over 10%. Method reported in this paper paves way for future research in circuit diagnosis, leveraging moments of the output to diagnose parametric faults in analog circuits.**

I. Introduction

Defects in analog integrated circuits can be primarily categorized into two important categories, namely: Catastrophic faults (open or short of components) and parametric faults (fractional deviation of circuit components from their nominal value). While extensive literature [1], [2], [3], [4], [5], [6], [7], [8] exists on test schemes detecting catastrophic (open/short) faults, parametric faults have not met the same success [9], [10], [11], [12]. The main reason for this disparity in test schemes is that catastrophic faults tend to upset the supply current drawn by the circuit or the output voltage by a reasonably large factor and any test scheme that is based on this observation can quite conveniently uncover catastrophic faults. However, parametric faults, when they occur have little impact on supply current and they are easily masked by measurement noise or general insensitivity of output to circuit parameter if they are not tested by careful input signal design targeting their excitation [13]. Different methods have been proposed to test parametric faults in analog circuits including the use of neural networks [14], [15], [16], [17], [18], spectral methods [19], [20], transfer function coefficient based test [21] and more recently the polynomial coefficient based test [22], [23]. As observed earlier, IDDQ test needs sizable deviation of circuit component from its nominal value to be useful. Other test methods require extra die area for testing or call for specific input signal excitation and increased test time (as is the case in neural networks based test methods). While these problems are addresed in polynomial based test [23], it is still in its early stages and the correct choice of order and frequency of test points are critical for good fault coverage. This calls for a scheme, should it be used at production, that has little additional hardware cost on die, reduced test application time and minimized complexity of input signal design.

If we have to reduce the input signal design complexity, we ask ourselves, 'What is the easiest available signal that needs little or no design effort?'. This is without doubt, white noise which is available as random voltage fluctuations across a resistor due to thermally agitated electrons. Power spectral density of this white noise is given by $\boxed{S_N(f) = 4kTR}\,\mathrm{V}^2/\mathrm{Hz}$. Previously [24], [25] white noise has been used as an excitation signal for testing circuits, and the output fourier spectrum is used for ensuring the circuit conforms to specification. However, in this work to leverage a random signal like white noise which is characterized only by its statistics such as mean, variance, third and higher order moments, we compute the moments at the output to be able to derive information on deviation in circuit parameters. We use the fact from circuit theory that a circuit can be considered a communication channel [26], [27], [28] and treat it as a probability density transformation function. The output, which is now the transformed RV has its signature moments that are used for testing the CUT for both catastrophic and parametric faults. We show in this paper that probability moments can be made exponentially sensitive to circuit parameters (as also reported in [29]), so that parametric faults of 10% and over result in sufficient excursions of the output probability moments to uncover these faults. In the sequel, we describe our scheme on a cascaded amplifier and a low pass filter. We then evaluate the performance of probability moments in conjunction with an exponential RV transformation to enhance sensitivity for fault detection on a benchmark elliptic filter.

The paper is organized as follows: Section II develops the background on moment theory, random variable transformation and defines minimum size detectable fault. The problem at hand and our approach is described with examples in section III. In section IV, generalize the described scheme to

978-1-4577-1490-0/11/$26.00 ©2011 IEEE

arbitrarily large circuits. We report the experimental results on benchmark elliptic filter in section V. We conclude in section VI.

II. Background

We first review moment theory for characterizing any Random Variable (RV). Next we motivate a discussion on transformation of RV to increase the sensitivity of generated moments to circuit parameters.

A. Moment Generating Functions

The jth moment $\forall j = 2 \cdots N$ of a continuous time RV $X(t)$, sampled at time instants $t = kT$, and denoted by X_k where $k = 0, 1 \cdots \infty$ is given by

$$\mu_j = \sum_{k=0}^{\infty} (X_k - \mu_1)^j p(X_k) \tag{1}$$

Moment generating function $M(s)$ of such a discrete RV X_k, serves as a convenient expression from which different orders of moments μ_j may be computed using the following relation:

$$\mu_j = \left. \frac{d^j M(s)}{ds^j} \right|_{s=0} \tag{2}$$

where $M(s)$ is given by

$$M(s) = E\left(e^{sX_k}\right) = \sum_{k=0}^{\infty} e^{sX_k} p(X_k) \tag{3}$$

B. Random Variable Transformation

RV transformations [30] are routinely used to change the probability density functions of the RV to a desired form so that one or more objectives can be met. In the analog circuit test context, if the circuit output with noise as input excitation is to be used as a metric for detecting parametric faults, we are to look for a transformation that can be used to track small changes in the input. In other words, we look for a transformation that –

1) Increases the sensitivity of output function for small changes in the input.
2) Increases absolute value of first and higher order moments of the output.

Let X be a RV whose domain is $\mathbb{R}$. We define a transformation $f(X)$ mapping X from $\mathbb{R} \Longrightarrow \mathbb{R}$ as follows:

$$f(X) = Xe^{\alpha X - \frac{\beta}{X}} \tag{4}$$

where α,$\beta \geq 0$ are parameters of the transformation. It can be shown that transformation $f(X)$ always gives second and higher order moments which are such that

$$\log_e |\mu_j|_{f(X)} \geq \log_e |\mu_j| \, \forall j = 2, 3, \cdots N$$

We plot the first six moments of the transformed RV, with $\alpha = .01, \beta = .001$ against standard deviation of input RV in figure 1, which shows that the moments of the transformed RV

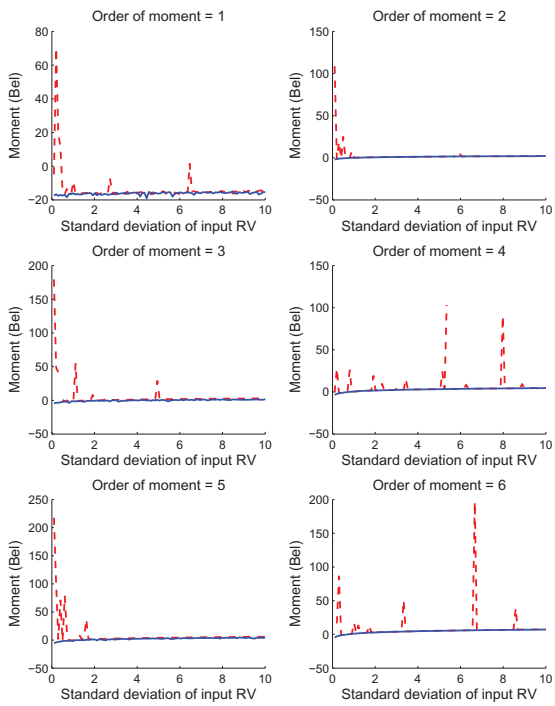

Fig. 1. Comparison of moments of different orders with (in red/dashed) and without (in blue/solid) RV transformation.

is always greater than that of the RV without transformation. At a few input standard deviations, transformed RV can have significantly higher moments compared to moments without transformation (Notice that the Y-axis in the plots are in the logarithmic scale). This makes the transformation defined in equation 4 very amenable for use as a post processing RV transformation at the output of the CUT. Even for small changes in the input, the resulting moments can be significantly different. The sensitivity of the transformed RV to the input RV is given by

$$S_X^f = \frac{X}{f} \frac{\partial f}{\partial X} = 1 + \alpha X + \frac{\beta}{X} \tag{5}$$

By the appropriate choice of α and β, we can increase the sensitivity of $f(X)$ for both small and large variations of X.

C. Minimum Size Detectable fault

Definition: Minimum size detectable fault (MSDF), ρ, of a circuit parameter is defined as the minimum fractional deviation of the circuit parameter from its nominal value for it to be detectable with all the other circuit parameters held at their nominal values. The fractional deviation can be positive or negative and is named upside-MSDF (UMSDF) or downside-MSDF (DMSDF) accordingly. This definition of minimum size detectable fault is general, regardless of the test technique used to uncover faults. In the context of the test technique described in this paper, we define MSDF based on moments of the probability density function of the circuit output. If $p_i \forall i = 1 \cdots \mathsf{K}$ represents the nominal value of ith circuit

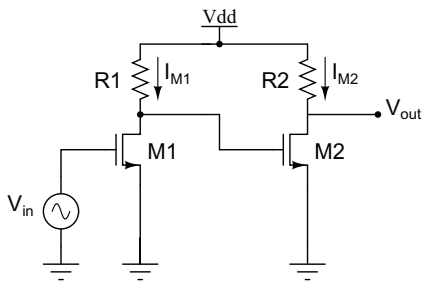

Fig. 2. Cascaded amplifier.

parameter $\forall i = 1 \cdots \mathrm{K}$ with a fault free tolerance range of $p_i\,(1 \pm \gamma)$, and $\overline{\mu_j} \forall j = 1 \cdots N$ are the N fault-free probability moments of the circuit output, then the UMSDF(DMSDF), $\hat{\rho}_i$ ($\check{\rho}_i$) of circuit parameter p_i is given by the minimum value of x, such that $p_i\,(1 \pm x)$ puts at least one of the moments $\overline{\mu_j} \forall j = 1 \cdots N$ outside the fault free hyper-concentric sphere defined by $|\overline{\mu_j} - \mu_j| \leq \mu_0$. μ_0 is the permitted deviation in moments when the circuit parameters are allowed excursions within their tolerance range γ.

III. Problem and Approach

We shall first illustrate with an example the calculation of limits of the probability moments of a first order low pass filter. We shall follow this up with calculation of MSDF values of the circuit parameters. Our next example is a two stage cascaded amplifier.

Example 1. First order RC filter: With white noise as the input, the discrete values are sampled Gaussian RV of zero mean and variance, $\sigma_{in}^2 = \frac{N_o}{2}$. The fault-free filtered response has a variance (also the second order moment) $\overline{\mu}_2 = \frac{N_o \pi}{4RC}$. Details of this calculation are shown in the appendix. However, if there is a parametric fault of size x in the circuit parameter R, then the new output variance is given by $\mu_2 = \frac{N_o \pi}{4R(1+x)C}$. If the circuit specifications can tolerate a moment deviation of μ_0, then the MSDF of R is given by the minimum value of x that violates $\overline{\mu}_2 - \mu_2 \leq \mu_0$. For the example in question, since we consider only the second order moment, the MSDF in R, denoted by ρ_R is given by

$$\rho_R = \frac{4\mu_0 CR}{N_o \pi - 4\mu_0 CR} \tag{6}$$

Similarly MSDF of capacitor C, ρ_C can be found and by symmetry it is equal to ρ_R.

Example 2. Two stage amplifier: Consider the cascaded amplifier shown in Figure 2. The output voltage V_{out} in terms of input voltage results in a fourth degree polynomial:

$$v_{out} = a_0 + a_1 v_{in} + a_2 v_{in}^2 + a_3 v_{in}^3 + a_4 v_{in}^4 \tag{7}$$

where constants a_0, a_1, a_2, a_3 are defined symbolically in (8) for transistors M1 and M2 operating in the saturation region.

TABLE I
MSDF for cascaded amplifier of Figure 2 with $\mu_0 = 0.05$.

Circuit parameter	%upside MSDF	%downside MSDF
Resistor R_1	7	8
Resistor R_2	10.5	7.5

$$a_0\,(R_1, R_2) = V_{DD} - R_2 K \left(\tfrac{W}{L}\right)_2 \left\{ \begin{array}{l} (V_{DD} - V_T)^2 + \\ R_1^2 K^2 \left(\tfrac{W}{L}\right)_1^2 V_T^4 - \\ 2(V_{DD} - V_T) R_1 \left(\tfrac{W}{L}\right)_1 V_T^2 \end{array} \right\}$$

$$a_1\,(R_1, R_2) = R_2 K \left(\tfrac{W}{L}\right)_2 \left\{ \begin{array}{l} 4R_1^2 K^2 \left(\tfrac{W}{L}\right)_1^2 V_T^3 \\ +2(V_{DD} - V_T) R_1 K \left(\tfrac{W}{L}\right)_1 V_T \end{array} \right\}$$

$$a_2\,(R_1, R_2) = R_2 K \left(\tfrac{W}{L}\right)_2 \left\{ \begin{array}{l} 2(V_{DD} - V_T) R_1 K \left(\tfrac{W}{L}\right)_1 \\ -6R_1^2 K^2 \left(\tfrac{W}{L}\right)_1^2 V_T^2 \end{array} \right\}$$

$$a_3\,(R_1, R_2) = 4V_T K^3 \left(\tfrac{W}{L}\right)_1^2 \left(\tfrac{W}{L}\right)_2^2 R_1^2 R_2$$

$$a_4\,(R_1, R_2) = -K^3 \left(\tfrac{W}{L}\right)_1^2 \left(\tfrac{W}{L}\right)_2^2 R_1^2 R_2 \tag{8}$$

If the cascaded amplifier is excited with white noise at its input, the fault free output can be a estimated as a random variable with its first order moment, namely mean $\overline{\mu_1}$ given by

$$\overline{\mu_1} = E\left\{a_0 + a_1 v_{in} + a_2 v_{in}^2 + a_3 v_{in}^3 + a_4 v_{in}^4\right\} \tag{9}$$

$$= a_0 + a_1 \mu_{1,in} + a_2 \mu_{2,in} + a_3 \mu_{3,in} + a_4 \mu_{4,in} \tag{10}$$

To find MSDF in R_1, let us assume we have a fractional deviation x in R_1 and the other circuit parameters are at their fault free values. If μ_0 is the tolerable fractional deviation in the first order moment at the output, the minimum value of x that satisfies inequality in equation (11) is the MSDF of parameter R_1.

$$\left\{ \begin{array}{l} a_0\,(R_1\,(1+x), R_2) \\ +a_1\,(R_1\,(1+x), R_2)\,\mu_{1,in} \\ +a_2\,(R_1\,(1+x), R_2)\,\mu_{2,in} \\ +a_3\,(R_1\,(1+x), R_2)\,\mu_{3,in} \\ +a_4\,(R_1\,(1+x), R_2)\,\mu_{4,in} \end{array} \right\} - \overline{\mu_1} \geq \mu_0 \tag{11}$$

Maximizing x, while meeting the constraint in equation 11 gives MSDF of R_1 as

$$\rho_{\mathrm{R}_1} = \frac{\mu_0}{\mathrm{a}_0 + \mathrm{a}_1 \mu_{1,\mathrm{in}} + \mathrm{a}_2 \mu_{2,\mathrm{in}} + \mathrm{a}_3 \mu_{3,\mathrm{in}} + \mathrm{a}_4 \mu_{4,\mathrm{in}}} \tag{12}$$

Similarly MSDF of R_2 can be evaluated.

Table I gives the MSDF for R_1 and R_2 based on the above calculation. Nominal values of $V_{DD} = 1.2V$, $V_T = 400mV$, $\left(\frac{W}{L}\right)_1 = \frac{1}{2}\left(\frac{W}{L}\right)_2 = 20$, and $K = 100\mu A/V^2$ are used for this example.

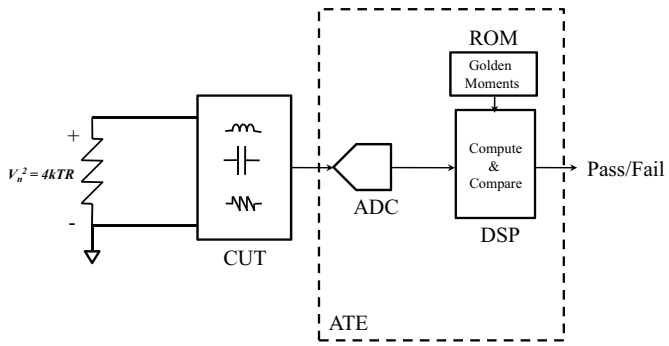

Fig. 3. Block Diagram of the system with CUT using white noise excitation.

IV. Generalization

The computation of MSDF shown in the previous section is too complex for arbitrarily large circuits. In a practical setting, as shown in figure 3, a complex circuit having more than 20 components, the input noise voltage (derived from a resistor maintained at desired temperature) is applied to the circuit. The output obtained from this circuit is passed through a suitable RV transformation function like the one given in equation 4. Probability density function (PDF) of the output of this RV transformation is estimated using the histogram spread of the output voltage values. Next, N^{th} order moments (orders upto N=6 are sufficient for most analog circuits having component count of ≤ 40) are found using the moment generating function defined in equation 3. The jth derivatives w.r.t. s required for j^{th} order moments are found as finite differences about s=0. Once the fault free values of all N moments are available, single parametric faults are injected into the circuit and the corresponding deviation in one or more moments are noted. Based on the moment deviations that can be tolerated, the fault size injected is steadily increased. The minimum fault size of any circuit parameter that causes at least one of the moments to just fall outside of its tolerance band (also called the fault-free hypersphere) gives the MSDF of that circuit parameter. Flowchart I in Figure 4 summarizes the process of numerically finding the V-transform coefficients and their bounds. Flowchart II in Figure 4 outlines a procedure to test CUT using the PDF moments. The bounds on moments of fault free circuit are found a priori as shown in Flowchart I of Figure 4.

V. Simulation Results

We simulated an elliptic filter shown in Figure 5 based on the test scheme discussed in figure 4. The circuit parameter values are as in the benchmark circuit maintained by Stroud et al. [31].Thermal noise from resistor of values $\mathrm{R} = 40\mathrm{G}\Omega, 60\mathrm{G}\Omega, 80\mathrm{G}\Omega, 100\mathrm{G}\Omega$ was used at T= 300K. Figure 6 shows the transient response of the elliptic filter for the Gaussian noise input of four different variances corresponding to the four different resistance values used for noise generation at the input. Figure 7 shows the transformed RV with the RV transformation given by equation 4 with parameters $\alpha = \beta = 1$. Notice that post transformation the signal levels

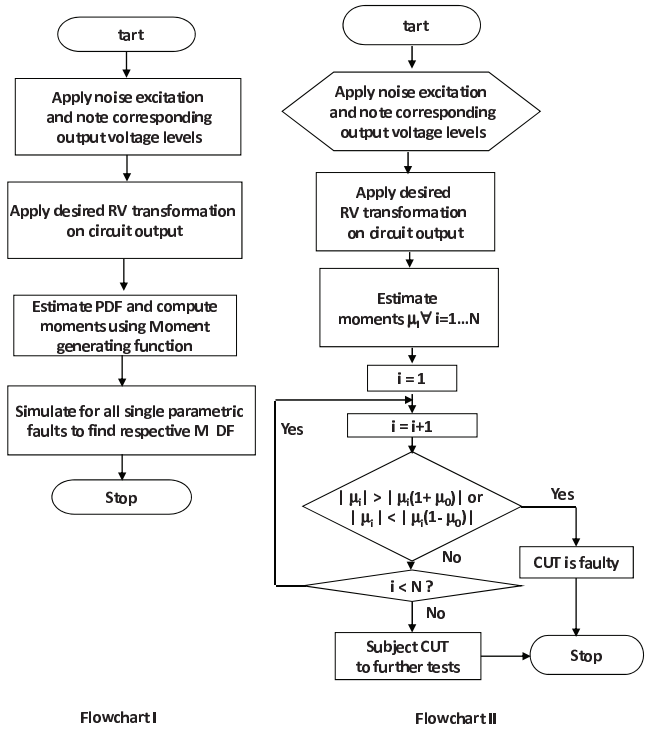

Fig. 4. Fault simulation process and bounding of moments (Flowchart I), and complete test procedure (Flowchart II).

are significantly better resolved as compared to that without RV. The six fault free moments of the elliptic filter before transformation are $\overline{\mu_1} = 4.53453$, $\overline{\mu_2} = 0.03234$, $\overline{\mu_3} = 0.02345$, $\overline{\mu_4} = 0.01125$, $\overline{\mu_5} = 0.009325$, $\overline{\mu_6} = 0.00623125$. After RV transformation, the fault free moments are given by $\overline{\mu_1} = 338.6453$, $\overline{\mu_2} = 1.8234$, $\overline{\mu_3} = 0.9254$, $\overline{\mu_4} = 0.8812$, $\overline{\mu_5} = 0.6365$, $\overline{\mu_6} = 0.1638125$.

The combinations of parameter values leading to limits on the coefficients are as shown in Tables II and III. Results on pass/fail detectability of few injected faults are tabulated in Table IV.

VI. Conclusion

A new approach for test and diagnosis of non-linear circuits based on probability density moments of the output was presented. We also showed the effective use of RV transformation

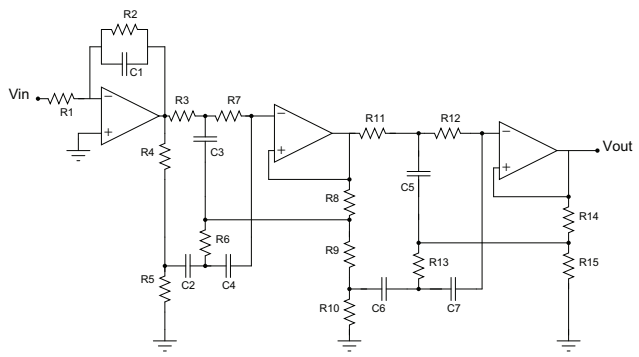

Fig. 5. Elliptic filter.

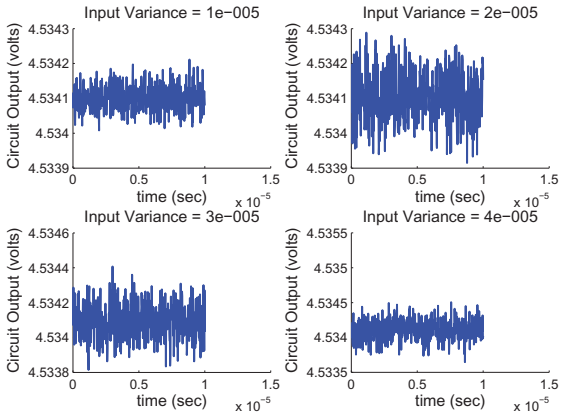

Fig. 6. Elliptic filter transient response before RV transformation

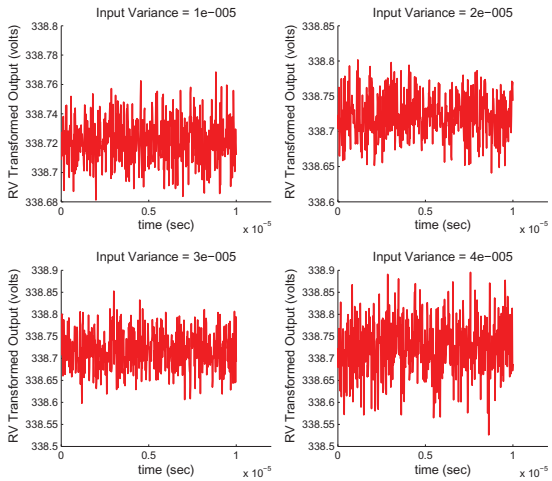

Fig. 7. Elliptic filter transient response after RV transformation

to sensitize the output moments to circuit parameters. The minimum sizes of detectable faults in some of the circuit parameters are as low as 10% for an elliptic filter, which implies impressive fault coverage can be achieved with moments as a test metric. Further, the prudent choice of RV transformations can enhance the fault detection resolution. Our future work will attempt fault diagnosis using moments where the input statistics can be sampled from different commonly available distributions and the output response for these different input statistics can be used to obtain a fault dictionary for single parametric faults.

Appendix

Output Variance of RC filter

We use the frequency domain approach to find the transformed RV for a gaussian noise input excitation of a first order RC filter shown in figure 8. The transfer function of the first order

TABLE II
PARAMETER COMBINATIONS LEADING TO MAXIMUM VALUES OF MOMENTS WITH DEVICE TOLERANCE $\gamma = 0.05$.

Circuit Parameter (Ω, nF)	μ_1	μ_2	μ_3	μ_4	μ_5	μ_6
$R_1 = 19.6k$	19.6k	20.58k	19.6k	20.58k	20.58k	18.62k
$R_2 = 196k$	186.2k	205.8k	205.8k	205.8k	186.2k	186.2k
$R_3 = 147k$	139.65k	147k	139.65k	139.65k	154.35k	147k
$R_4 = 1k$	1050	1050	950	1000	1050	950
$R_5 = 71.5$	75.075	67.925	75.075	71.5	75.075	67.925
$R_6 = 37.4k$	37.4k	37.4k	37.4k	39.27k	39.27k	37.4k
$R_7 = 154k$	154k	154k	154k	146.3k	154k	154k
$R_8 = 260$	260	260	260	260	273	273
$R_9 = 740$	703	777	777	703	777	777
$R_{10} = 500$	500	500	475	475	525	500
$R_{11} = 110k$	115.5k	104.5k	104.5k	104.5k	104.5k	110k
$R_{12} = 110k$	115.5k	104.5k	104.5k	110k	110k	115.5k
$R_{13} = 27.4k$	28.77k	26.03k	26.03k	26.03k	27.4k	26.03k
$R_{14} = 40$	40	40	38	40	40	40
$R_{15} = 960$	912	1008	912	960	912	960
$C_1 = 2.67$	2.8035	2.5365	2.67	2.67	2.67	2.5365
$C_2 = 2.67$	2.8035	2.67	2.8035	2.8035	2.5365	2.67
$C_3 = 2.67$	2.8035	2.8035	2.67	2.5365	2.5365	2.5365
$C_4 = 2.67$	2.8035	2.67	2.5365	2.67	2.5365	2.67
$C_5 = 2.67$	2.8035	2.67	2.8035	2.5365	2.5365	2.67
$C_6 = 2.67$	2.8035	2.5365	2.8035	2.5365	2.67	2.8035
$C_7 = 2.67$	2.67	2.5365	2.8035	2.8035	2.67	2.5365

RC filter is given by

$$H(s) = \frac{V_o(s)}{V_i(s)} = \frac{1}{sRC+1} \implies |H(j\omega)|^2 = \frac{1}{(\omega RC)^2+1} \tag{13}$$

With white noise as the input, the discrete values are sampled Gaussian RV of zero mean and variance = $\frac{N_o}{2}$. The output of this filter which is the filtered response is given by v_o and its frequency domain expression is given by

$$|V_o(j\omega)|^2 = \frac{1}{(\omega RC)^2+1}|V_i(j\omega)|^2 \tag{14}$$

TABLE III
PARAMETER COMBINATIONS LEADING TO MINIMUM VALUES OF MOMENTS WITH DEVICE TOLERANCE $\gamma = 0.05$.

Circuit Parameter (Ω, nF)	μ_1	μ_2	μ_3	μ_4	μ_5	μ_6
$R_1 = 19.6k$	19.6k	18.62k	19.6k	19.6k	19.6k	20.58k
$R_2 = 196k$	205.8k	205.8k	205.8k	196k	186.2k	205.8k
$R_3 = 147k$	147k	154.35k	154.35k	139.65k	154.35k	154.35k
$R_4 = 1k$	950	1000	1050	950	1050	950
$R_5 = 71.5$	67.925	71.5	75.075	75.075	67.925	71.5
$R_6 = 37.4k$	39.27k	37.4k	35.53k	39.27k	35.53k	35.53k
$R_7 = 154k$	146.3k	161.7k	154k	161.7k	154k	154k
$R_8 = 260$	247	273	247	273	260	247
$R_9 = 740$	703	777	740	777	777	740
$R_{10} = 500$	500	500	475	475	525	475
$R_{11} = 110k$	104.5k	115.5k	115.5k	115.5k	110k	110k
$R_{12} = 110k$	115.5k	110k	115.5k	110k	104.5k	115.5k
$R_{13} = 27.4k$	27.4k	26.03k	27.4k	28.77k	28.77k	26.03k
$R_{14} = 40$	42	40	40	38	40	38
$R_{15} = 960$	1008	960	1008	1008	912	960
$C_1 = 2.67$	2.67	2.5365	2.5365	2.67	2.5365	2.67
$C_2 = 2.67$	2.67	2.67	2.67	2.67	2.67	2.8035
$C_3 = 2.67$	2.8035	2.8035	2.8035	2.8035	2.5365	2.8035
$C_4 = 2.67$	2.8035	2.8035	2.8035	2.8035	2.8035	2.67
$C_5 = 2.67$	2.67	2.8035	2.67	2.8035	2.8035	2.67
$C_6 = 2.67$	2.8035	2.5365	2.8035	2.5365	2.67	2.8035
$C_7 = 2.67$	2.67	2.5365	2.8035	2.67	2.67	2.8035

TABLE IV
RESULTS FOR SOME INJECTED FAULTS.

Circuit Parameter	Out of bound moment	Fault detected?
R_1 down 12%	$\mu_3,\ \mu_1$	Yes
R_2 down 10%	μ_4	Yes
R_3 up 12%	$\mu_1,\ \mu_2$	Yes
R_4 down 10%	μ_2	Yes
R_5 up 10%	μ_4	Yes
R_7 up 15%	$\mu_5,\ \mu_6$	Yes
R_{11} up 15%	μ_3	Yes
R_{12} down 15%	$\mu_2,\ \mu_6$	Yes
C_1 up 11%	$\mu_1,\ \mu_2$	Yes
C_4 up 12%	μ_4	Yes
C_5 down 15%	$\mu_1,\ \mu_6$	Yes

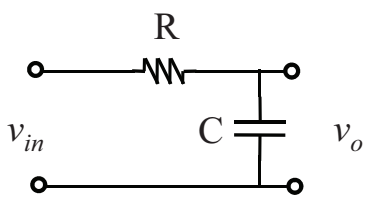

Fig. 8. I order RC filter.

To compute the effective second order moment we integrate this output over all frequencies, i.e., $\omega = (0, \infty)$.

$$\overline{\mu_2} = \int_0^\infty \left(\frac{d\omega}{(\omega RC)^2 + 1} \right) \frac{N_o}{2}$$
$$= \frac{1}{RC} \frac{N_o}{2} \arctan(\omega RC)|_0^\infty \quad (15)$$

$$\overline{\mu_2} = \frac{N_o \pi}{4RC} \quad (16)$$

REFERENCES

[1] L. Milor and V. Visvanathan, "Detection of Catastrophic Faults in Analog Integrated Circuits," *IEEE Trans. Comp. Aided Design*, vol. 8, no. 6, pp. 114–130, Jun. 1989.

[2] E. Acar and S. Ozev, "Defect-based rf testing using a new catastrophic fault model," in *Proc. IEEE Int. Test Conf ITC 2005*, 2005.

[3] K. R. Eckersall, P. L. Wrighton, I. M. Bell, B. R. Bannister, and G. E. Taylor, "Testing mixed signal asics through the use of supply current monitoring," in *Proc. ETC 93. Third European Test Conf.*, 1993, pp. 385–391.

[4] D. D. Gaitonde and D. M. H. Walker, "Hierarchical mapping of spot defects to catastrophic faults-design and applications," *IEEE Transactions on Semiconductor Manufacturing*, vol. 8, no. 2, pp. 167–177, 1995.

[5] F. Azais, Y. Bertrand, M. Renovell, A. Ivanov, and S. Tabatabaei, "An all-digital dft scheme for testing catastrophic faults in plls," *IEEE Design & Test of Computers*, vol. 20, no. 1, pp. 60–67, 2003.

[6] W. M. Lindermeir, H. E. Graeb, and K. J. Antreich, "Analog testing by characteristic observation inference," *IEEE Transactions on Computer-Aided Design of Integrated Circuits and Systems*, vol. 18, no. 9, pp. 1353–1368, 1999.

[7] S. Bracho, M. Martinez, and J. Arguelles, "Current test methods in mixed signal circuits," in *Proc. 38th Midwest Symp. Circuits and Systems, Proceedings*, vol. 2, 1995, pp. 1162–1167.

[8] M. Tadeusiewicz and S. Halgas, "An efficient method for simulation of multiple catastrophic faults," in *Proc. 15th IEEE Int. Conf. Electronics, Circuits and Systems ICECS 2008*, 2008, pp. 356–359.

[9] Z. Guo, X. M. Zhang, J. Savir, and Y.-Q. Shi, "On test and characterization of analog linear time-invariant circuits using neural networks," in *Proc. 10th Asian Test Symp*, 2001, pp. 338–343.

[10] Y. Xing, "Defect-oriented testing of mixed-signal ics: some industrial experience," in *Test Conference, 1998. Proceedings., International*, oct. 1998, pp. 678 –687.

[11] J. Figueras, "Possibilities and Limitations of IDDQ Testing in Submicron CMOS," in *Proc. Innovative Systems in Silicon Conf.*, Oct. 1997, pp. 174–185.

[12] M. L. Bushnell and V. D. Agrawal, *Essentials of Electronic Testing for Digital, Memory and Mixed-Signal VLSI Circuits*. Boston: Kluwer Academic Publishers, 2000.

[13] J. Savir and Z. Guo, "Test limitations of parametric faults in analog circuits," in *Proc. 11th Asian Test Symp. (ATS '02)*, 2002, pp. 39–44.

[14] M. Aminian and F. Aminian, "A comprehensive examination of neural network architectures for analog fault diagnosis," in *Proc. Int. Joint Conf. Neural Networks IJCNN '01*, vol. 3, 2001, pp. 2304–2309.

[15] Y. Deng, Y. He, and Y. Sun, "Fault diagnosis of analog circuits with tolerances using artificial neural networks," in *Proc. IEEE Asia-Pacific Conf. Circuits and Systems IEEE APCCAS 2000*, 2000, pp. 292–295.

[16] R. Spina and S. Upadhyaya, "Fault diagnosis of analog circuits using artificial neural networks as signature analyzers," in *Proc. Fifth Annual IEEE Int. ASIC Conf. and Exhibit*, 1992, pp. 355–358.

[17] I. Sutton, J. C., "Identification of electronic component faults using neural networks and fuzzy systems," in *Proc. Int Industrial Electronics, Control, Instrumentation, and Automation Power Electronics and Motion Control. Conf*, 1992, pp. 1466–1471.

[18] S. Chakrabarty, V. Rajan, J. Ying, M. Mansjur, K. Pattipati, and S. Deb, "A virtual test-bench for analog circuit testability analysis and fault diagnosis," in *Proc. IEEE AUTOTESTCON '98. IEEE Systems Readiness Technology Conf.*, 1998, pp. 337–352.

[19] V. Zagursky, N. Semyonova, and M. Sirovatkina, "A histogram method for analog-digital converters testing in time and spectral domain," in *European Design and Test Conference, 1995. ED TC 1995, Proceedings.*, Mar. 1995, p. 607.

[20] W. Allen, D. Bailey, S. Demidenko, and V. Piuri, "Analysis and application of digital spectral warping in analog and mixed-signal testing," *Reliability, IEEE Transactions on*, vol. 52, no. 4, pp. 444 – 457, Dec. 2003.

[21] Z. Guo and J. Savir, "Analog Circuit Test Using Transfer Function Coefficient Estimates," in *Proc. Int. Test Conf.*, Oct. 2003, pp. 1155–1163.

[22] S. Sindia, V. Singh, and V. D. Agrawal, "Polynomial coefficient based dc testing of non-linear analog circuits," in *Proc. 19th ACM Great Lakes Symp. on VLSI*, May 2009, pp. 69–74.

[23] ——, "Multi-tone testing of linear and nonlinear analog circuits using polynomial coefficients," in *Asian Test Symposium, 2009. ATS '09.*, nov. 2009, pp. 63 –68.

[24] W. M. Lindermeir, T. J. Vogels, and H. E. Graeb, "Analog test design with idd measurements for the detection of parametric and catastrophic faults," in *Proc. Design, Automation and Test in Europe*, 1998, pp. 822–827.

[25] P. Kabisatpathy, A. Barua, and S. Sinha, "A pseudo-random testing scheme for analog integrated circuits using artificial neural network model-based observers," in *Proc. MWSCAS-2002 Circuits and Systems The 2002 45th Midwest Symp*, vol. 2, 2002.

[26] N. R. Shanbhag, "A fundamental basis for power-reduction in vlsi circuits," in *Proc. IEEE Int Circuits and Systems ISCAS '96., 'Connecting the World'. Symp*, vol. 4, 1996, pp. 9–12.

[27] N. Shanbhag, K. Soumyanath, and S. Martin, "Reliable low-power design in the presence of deep submicron noise," in *Proc. Int. Symp. Low Power Electronics and Design ISLPED '00*, 2000, pp. 295–302.

[28] V. D. Agrawal, "An information theoretic approach to digital fault testing," *IEEE Trans. Comput.*, vol. 30, pp. 582–587, August 1981. [Online]. Available: http://portal.acm.org/citation.cfm?id=1311096.1311688

[29] S. Sindia, V. Singh, and V. D. Agrawal, "V-transform: An enhanced polynomial coefficient based dc test for non-linear analog circuits," in *Proc. of 8th IEEE East West Design-Test Symposium*, sep. 2009, pp. 283–286.

[30] A. Papoulis, *Probability, Random Variables, and Stochastic Processes*. McGraw-Hill, 1965.

[31] R. Kondagunturi, E. Bradley, K. Maggard, and C. Stroud, "Benchmark Circuits for Analog and Mixed-Signal Testing," in *Proc. 20th Int. Conf. on Microelectronics*, Mar. 1999, pp. 217–220.