SPICE Simulation and Analysis through Internet and Intranet Networks

John Regnier and Bogdan Wilamowski

Editor's Note: This month, the Simulation & Modeling column features an article by John Regnier and Bogdan Wilamowski from the University of Wyoming that illustrates a web-based CAD tool. Such tools are not new, but it is instructive to reconsider their existence and potential. On the "pro" side of the debate on the value of web-based simulation tools are (1) the ease with which CAD vendors can manage centralized tools, and (2) the availability of standard browsers that facilitates tool portability. On the "con" side, (A) web tools are not practical for situations requiring transfer and storage of very large databases, and (B) unless the tools are confined to intranets, security and integrity of data can be problematic. In any case, there is a large value to CAD developers and users to have ready access to emerging simulation tools, even if only for development and demonstration purposes.

Those who are interested in viewing other web-based simulators from the physical realm of integrated circuits can also reference the National Center for Computational Electronics (www-ncce.ceg.uiuc.edu). If you know of other public domain sites of interest to Simulation & Modeling readers, please send me e-mail containing the URLs for publication at a later date.

—LA (arledge@src.org)

Computer networks provide the ability to access all kinds of information. Through the internet, information is made available from all around the world, and intranet networks provide connectivity for a smaller, more isolated domain like a company or a school. Networks are efficient and have become a popular means of computing. According to Richard Newton, a professor at the University of California at Berkeley, "Using the principle of EDA tools running on powerful hosts ...the World Wide Web could transform design by ushering in an era of pay-per-use tools" [1]. Instead of buying expensive software that is seldom used, it would be more efficient to use CAD tools through the internet. The SPICE usage in this presentation is just an example of how CAD tools can be implemented on the internet. Here we describe an actual implementation and the programming technology used to develop such a tool.

Several methods of computer network programming are available including Java and CGI (Common Gateway Interface). The focus here will be the advantages of network programming when used for SPICE simulation and analysis. An appli-

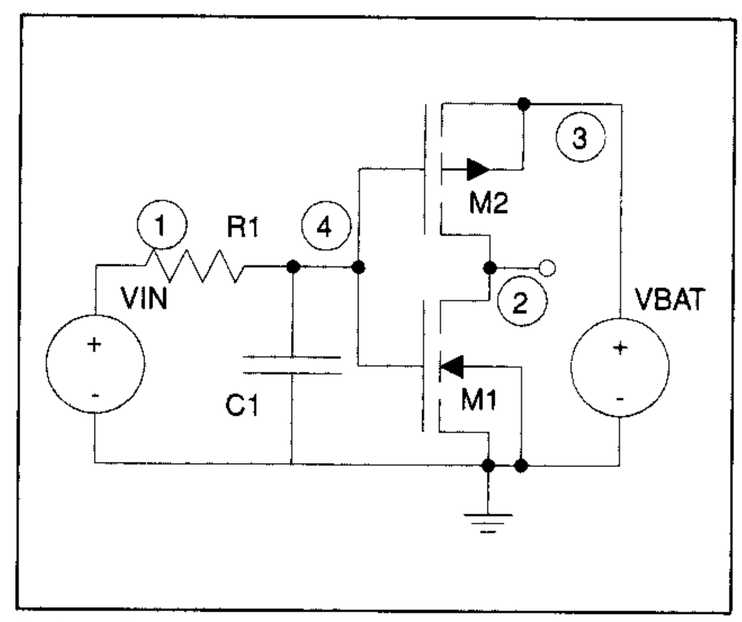

2. Simple CMOS inverter.

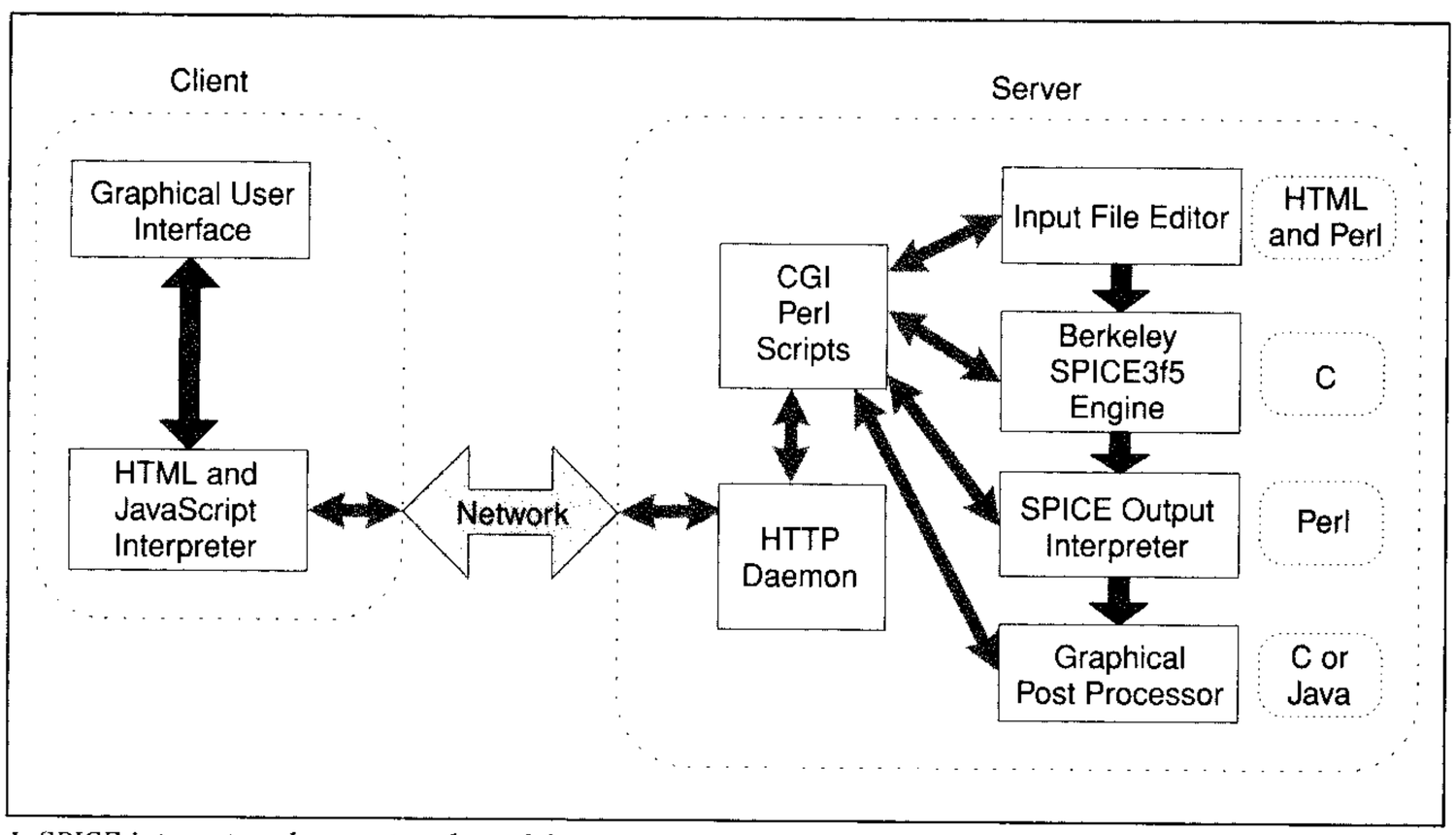

1. SPICE internet package network model.

Lawrence Arledge, Editor

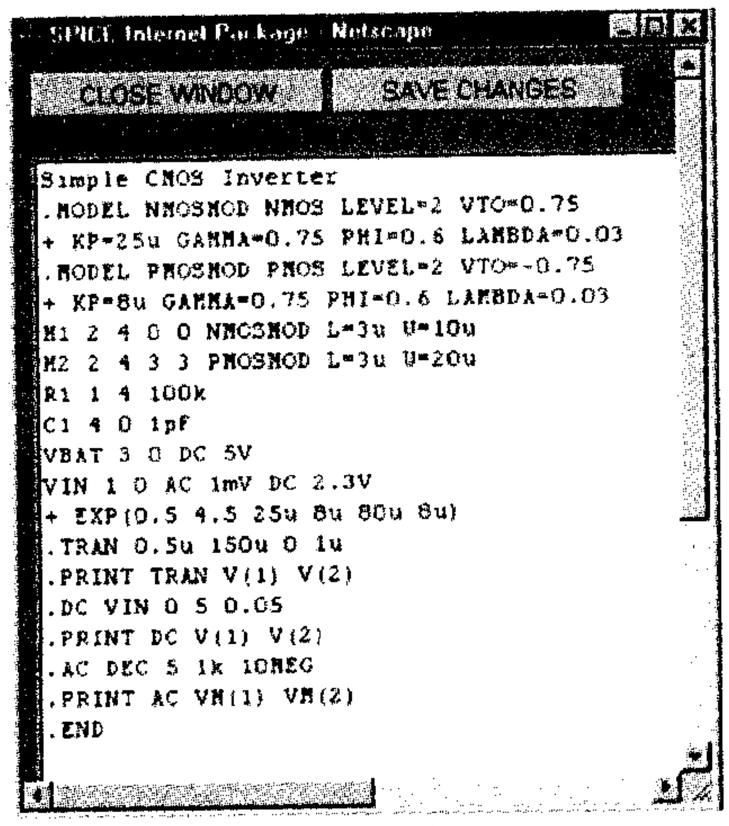

3. SPICE3 input file for CMOS inverter.

cation called the SPICE Internet Package (SIP) has been developed for use through internet and intranet networks. The SIP provides an operating-system-independent interface that allows SPICE simulation and analysis to be performed from any computer that has a web browser on the internet or an intranet. The SIP has a user-friendly GUI (graphical user interface) and features include password protection and user accounts, local or remote files for simulation, editing of circuit files while viewing simulation results, and analysis of simulated data in the form of images or formatted text.

NETWORK PROGRAMMING OVERVIEW

Several network programming tools that are available today include Java, CGI, ActiveX, JavaScript, VBScript, HTML, and Perl. During software development it is important to justify which part of the software should run on the client machine and which part should run on the server. CGI is quite different from writing Java applets in this aspect. Applets are transferred through a network when requested and execution is performed entirely on the client machine that made the request. In CGI much less information has to be passed to the server and the server executes instructions based on the given information and sends the results back to the local machine that made the request. In the case of the SIP it only makes sense to use CGI for the SPICE simulation because it would be impossible to send the SPICE engine through the network every time it was requested, and this would be extremely slow. Java technology could also be used for functions like generating and manipulating graphs and implementing the graphical user interface on the client side. The SIP program currently incorporates CGI, Perl, HTML, and JavaScript. These technologies are briefly described below.

The CGI programming allows dynamic web page generation in a web browser based on user selections in the initial page displayed in the web browser. Communication between a CGI program and the web browser is accomplished through a network connection between the web browser and a computer running an HTTP (hypertext transfer protocol) server. A CGI program executes on a server when it receives a request to process information from a web browser. The server then decides if the request should be granted and if the CGI program actually exists. If the authorization is secured the server executes the CGI program and returns the results to the web browsers that requested the processing.

Perl is a programming language especially suited for CGI network programming and commonly used for text processing and system shell programming. Sometimes a Perl program is called a Perl script because it is an interpreted language and is not compiled like a C program. A Perl script is similar to a Unix shell program. Perl has many features that make it well suited to processing CGI requests and generating HTML pages.

HTML and JavaScript provide the front-end GUI that allows a user to click a button or enter a circuit filename and start circuit simulations. Events in JavaScript are monitored and processing of information is initiated through features of these two technologies.

SIP DESCRIPTION

The SIP software package is a SPICE simulation and analysis program implemented in the network environment. A unique feature of the SIP program is that it is

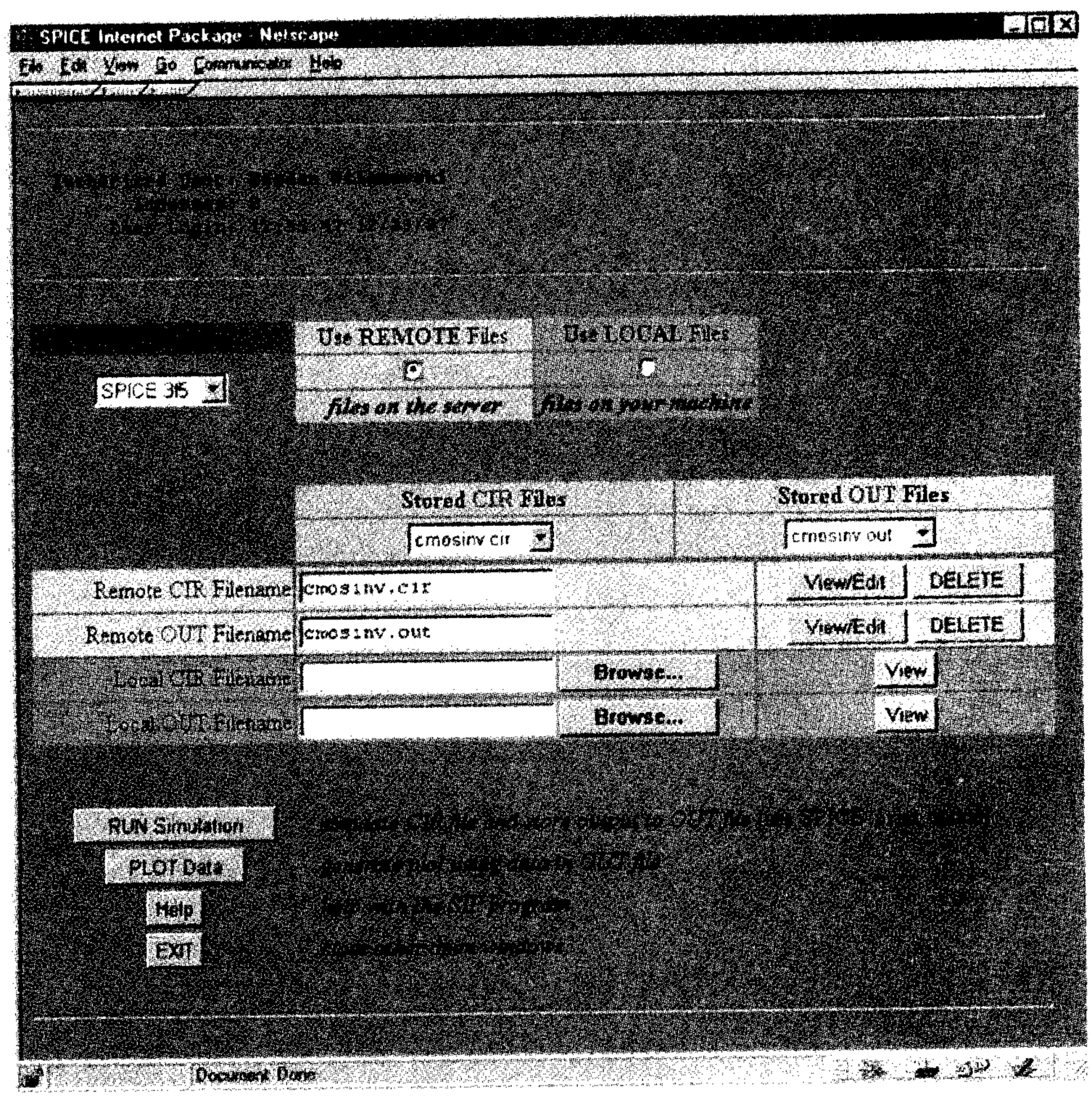

4. Graphical user interface for SIP package.

operating-system-independent. Anyone that has access to the internet and a web browser, such as Netscape Navigator or MS Internet Explorer, can run a SPICE simulation and view the results graphically from anywhere in the world using any operating system. A network model of the SIP software package is shown in Fig. 1.

A server is configured to accept requests from web browsers through network connections. The server processes the request for SPICE simulation or analysis and returns the results to the requesting web browser as an HTML document. The graphical analysis is embedded in the HTML as an image or returned as formatted text. Fig. 1 shows the flow of information and the distinction from the client and the server. Some of the SIP features include:

- Simulation and analysis of SPICE files stored on the server or on your local machine.
- Graphing of DC/AC/Transient analysis data from a remote or local file. The data used for graphing is generated with the SPICE ".PRINT ..." COMMAND.
- Customizing the graphical analysis including zoom and scale.
- One copy of the SPICE engine runs on a server and many users can access the SIP program simultaneously.
- Password protection and separate file areas for each user password.
- Editing of personal input and output files stored on the server.
- Multiple windows open at the same time to allow editing of circuit files while viewing simulation output.
- Analysis output can be specified as a gif image or raw text containing the data points.

The current version of SIP is written for the Unix operating system. Another version of SIP that will run under Windows NT is under development. Few changes are required between the two versions because of the operating system independence of the programming languages being used. Perl, for example, is available for Windows NT as well as the Unix system and JavaScript and HTML are totally platform independent. The image generation is currently done with the gnuplot program and netpbm utilities.

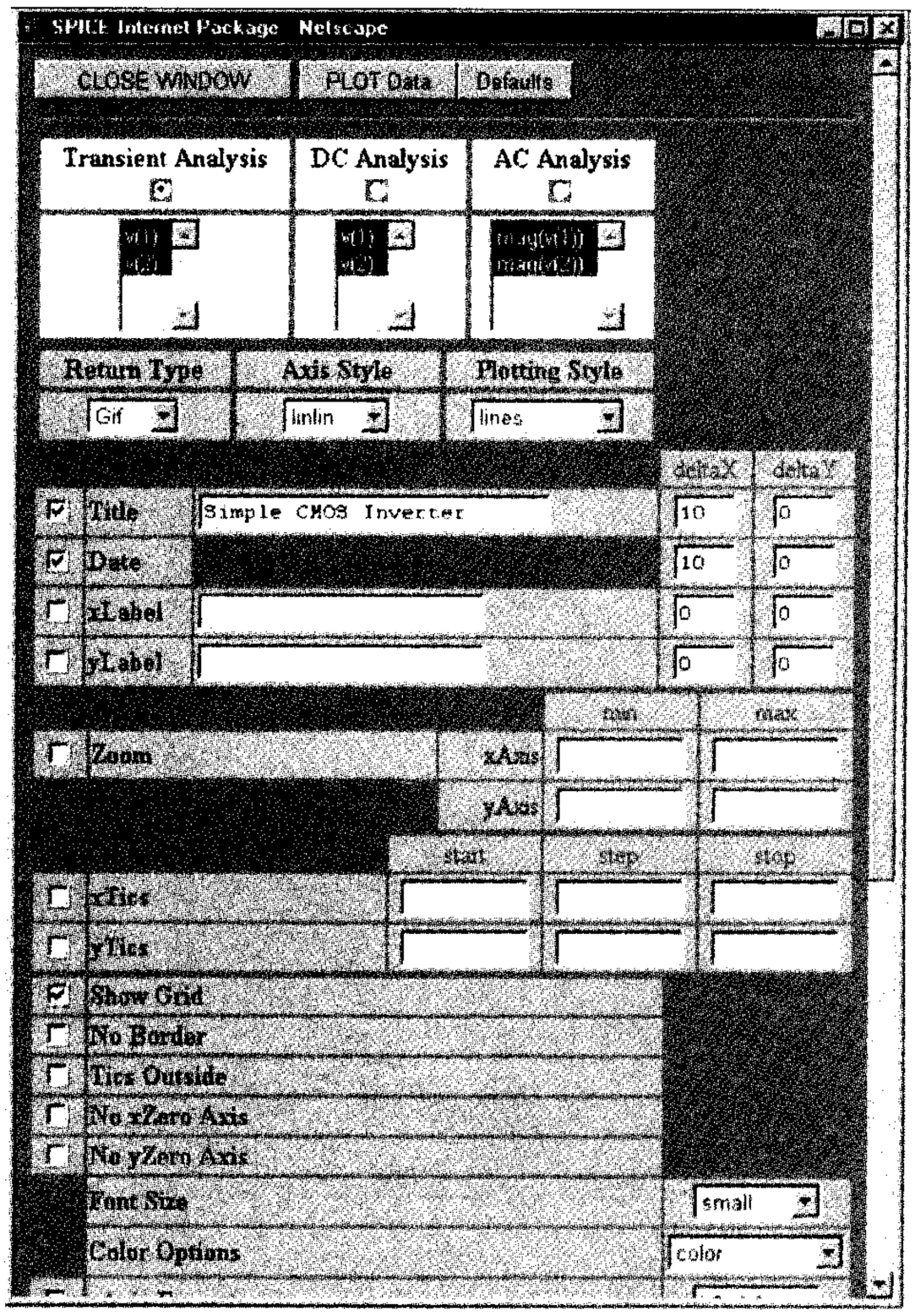

5. Upper portion of the plotting configurations.

SIP EXAMPLES

As an example of the use of the SIP program, consider the MOS inverter in Fig. 2. The SPICE3 input file in Fig. 3 describes the MOS circuit in terms of the SPICE3 language. Notice in the SPICE code that there are commands for the SPICE simulator to analyze the dc sweep, the ac analysis, and the transient response of the circuit and to print the output of V(1) and V(2). The GUI is shown in Fig. 4. It is necessary to select the radio button for ***REMOTE*** or ***LOCAL*** files depending on which you are using. This decision specifies whether the simulation and graphing programs will use the remote or local file names that you entered. If you use local files you have to save the output from simulation in a file on you local machine, and then enter that name in the ***Local OUT Filename*** edit box in order to plot the data.

To enter a SPICE input file select the filename from the CIR drop down box or type the name into the ***CIR Filename*** edit box and then press the ***VIEW/EDIT*** button. After entering or modifying the input file press ***SAVE CHANGES*** in the edit window to save the changes to the file. After entering the input file and saving it, the simulation is then run by selecting the ***Run Simulation*** button. The output from the simulation is displayed in the output window. If remote files were used the output is also saved to the file in the ***Remote OUT Filename*** edit box automatically. Next generate a graph of the output data by pressing the ***PLOT Data*** button. A window will open allowing you to select what variables you want to plot and other customization variables as shown in Fig. 5. Select ***PLOT Data*** again and the analysis is returned to the output window as shown in Fig. 6. To close all the windows and return to the original web browser window press the ***EXIT SIP*** button. There is also a ***HELP*** button describing how to use the SIP program. It is also possible to save the output data in a space delimited ASCII file so a high quality graph can be generated by MS Excel or other plotting packages.

Another example is demonstrated with the nonideal model of a 741 OPAMP shown in Fig. 7, which uses the macrodome of OPAMP as described in [2]. Also, in this case all three types of analysis are performed. Figure 8 shows the transient response of the amplifier. Note the two types of distortions due to rail-voltage limitation and slew-rate limitation.

SUMMARY

The purpose of this presentation was to show how CAD tools can be used through

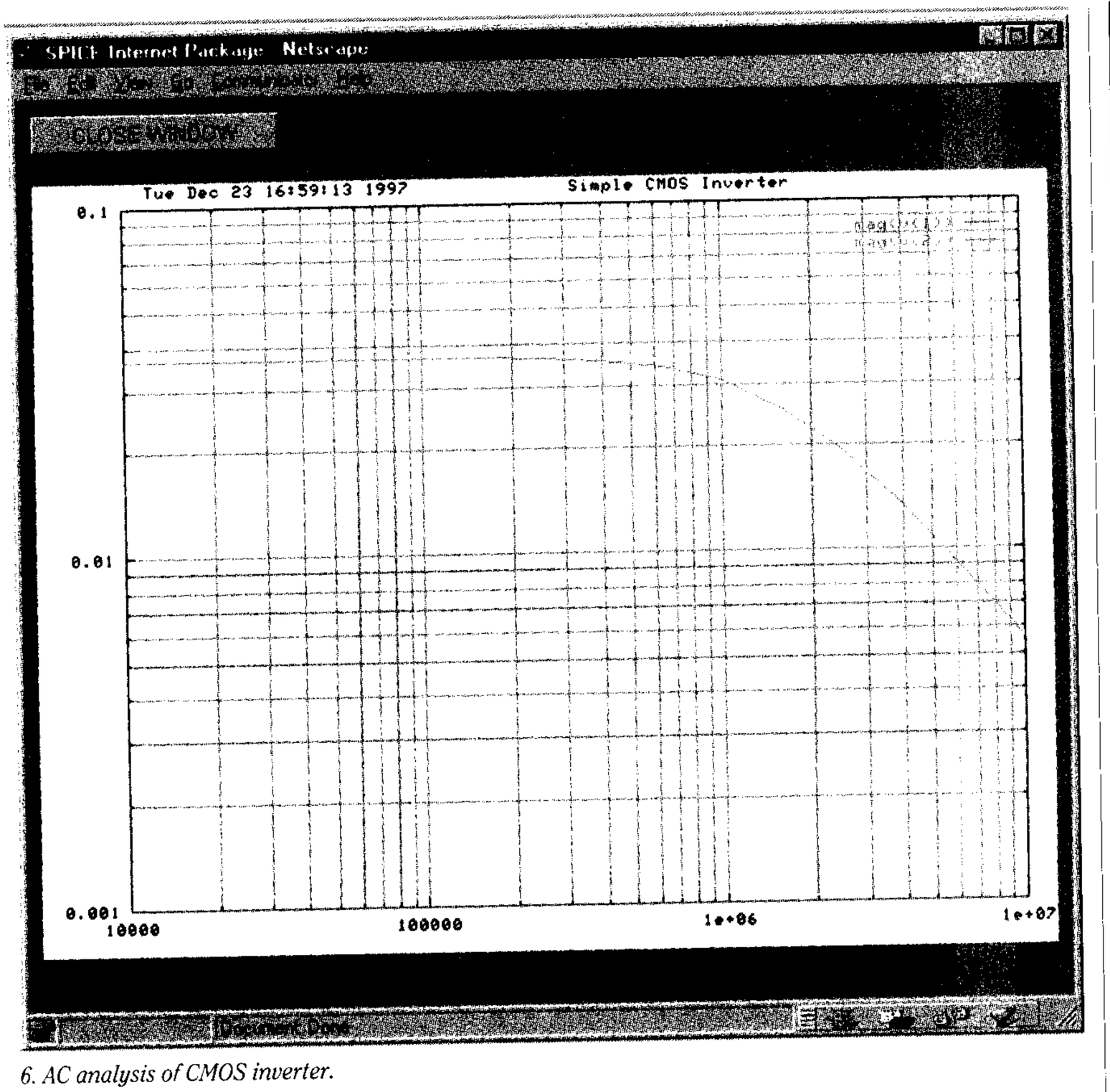

6. AC analysis of CMOS inverter.

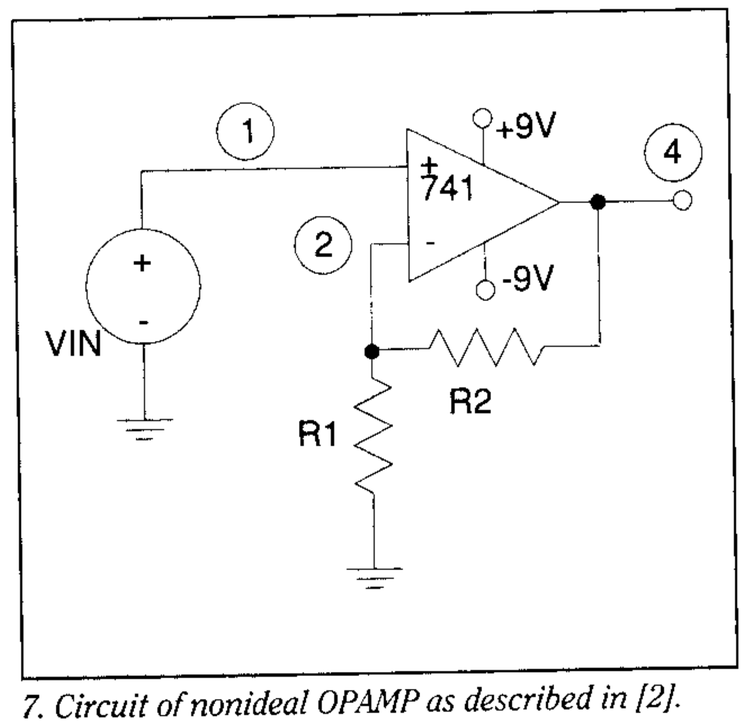

7. Circuit of nonideal OPAMP as described in [2].

Please send mail to *regnier@uwyo.edu* or *wilam@uwyo.edu* with any comments or questions.

John Regnier and *Bogdan Wilamowski* are with the Department of Electrical Engineering at the University of Wyoming in Laramie, Wyoming, USA.

REFERENCES

1. Linda Geppert, *IEEE Spectrum*, January 1997.
2. Bogdan M. Wilamowski and Richard C. Jaeger, *Computerized Circuit Analysis Using SPICE Programs*, McGraw-Hill, 1997. CD■

the internet, and the SIP is just an example of using SPICE. Several features make the SIP a desirable program for computer-aided engineering and design. Only one copy of the SPICE engine needs to be installed and configured. One machine acts as the server and other machines can simultaneously access the SPICE engine through network connections. Remote access to SIP allows users to run SPICE simulations from any computer on the network, whether it be from home or another office in another building or town. Also the current SPICE engine used is SPICE3f5 from Berkeley, which allows an unlimited number of transistors, unlike various "student versions" of SPICE programs that are available.

User passwords are required because the SIP program is accessible from around the world and a heavy number of users would slow the server down noticeably. For an undetermined time you can access the SIP and try some examples with the password "**IEEE**" at the following URL:

http://atlantis.uwyo.edu/~regnier/sip

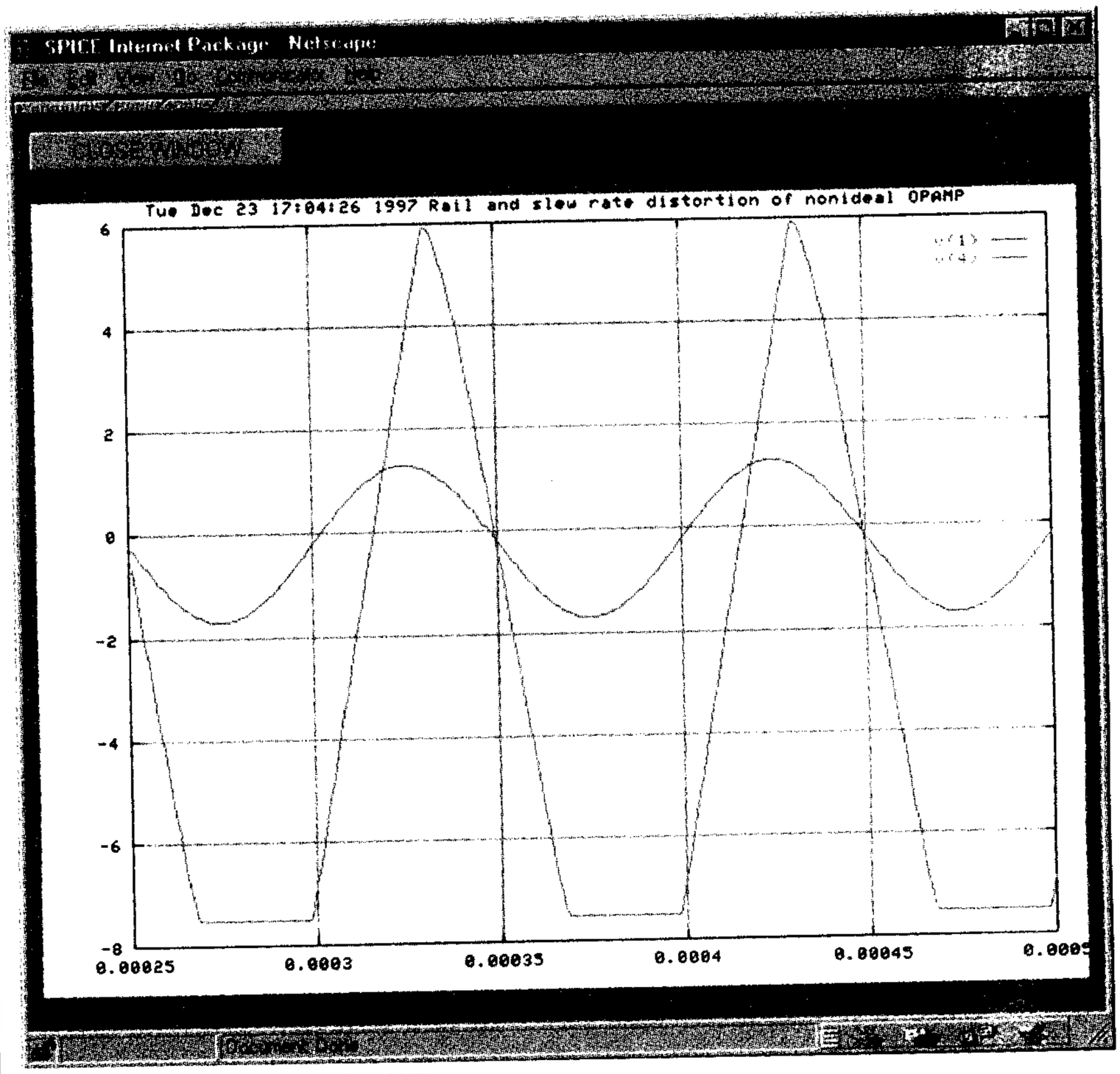

8. Transient analysis of nonideal OPAMP.