PC Programs for Engineers

Lawrence P. Huelsman, Editor

Welcome to the PCPE (PC Programs for Engineers) column. Regular readers of this column will recall that in the July 1992 issue, the PCPE column featured a program called FILTER. The program was written by Dr. B. M. Wilamowski and his students of the Department of Electrical Engineering, University of Wyoming. FILTER was an exceptional program which provided a wide range of approximation and realization capabilities for active analog filters. In addition to providing approximations for the Butterworth, Chebyshev, Inverse Chebyshev, Elliptic, and Bessel network functions, it provided fifteen different active-RC configurations to realize these functions as cascades of second-order building blocks. Realizations were provided for low-pass, high-pass, band-pass, and band-reject characteristics. The program provided many features, including a section on polynomial arithmetic. It contained many graphic outputs such as magnitude, phase and delay plots. Plots of pole-zero locations were also available, as were time-domain response plots such as impulse response and step response. The FILTER program has been one of the ones most requested by readers of this column.

Why am I giving you all this background information? Simply because Dr. Wilamowski has done it again! He and Rob Koller are the authors of the program featured this month, a program called LADDER. This program basically does for passive analog filters what FILTER did for active ones. It includes many of the features of the former program, for example the same full range of approximation capabilities, including one for the inverse Chebyshev filter, for which an approximation is relatively rarely found. Also included are the polynomial and network function manipulation routines, which include the capability of making partial and continued fraction expansions. It features the same wide range of graphical outputs, such as pole-zero plots, frequency domain magnitude, phase, and delay plots, and time-domain impulse and step responses. The program provides double-resistance terminated passive lossless ladder realizations for all the approximations. Provision is made for shifting transmission zeros to infinity, and/or moving the first peak of the magnitude response to the origin where required for realizability. Unequal resistance terminations are included. A unique feature of the program is the inclusion of a step-by-step synthesis response option for the user who desires to see the intermediate synthesis steps as well as the final results. Finally, the program generates a PSpice net list which permits direct use of PSpice to verify a given realization. Some of the program's major features follow.

Program: LADDER

Purpose: Synthesizes and tests ladder type passive filters.

Information: Dr. B.M. Wilamowski
Dept. of Electrical Engineering
University of Wyoming
Laramie, Wyoming 82071

Description: LADDER was written by Robert Koller and Bogdan Wilamowski for computer-aided filter design. Two programs, FIESTA and FILTER, have already been presented in the PC Programs for Engineers column of *Circuits and Devices* Magazine. Unlike the previously presented packages, which were oriented for cascade type active filter designs, this program is for passive filter designs. The ladder prototypes that it generates are required for many low sensitivity modern filter implementations, such as leap frog active filters, switched capacitor and switched current filters, and even for some digital filters. LADDER is meant to be an aide to education, so it includes many features beneficial to advanced courses in filter design. LADDER is menu driven and has the following features built-in:

- Transfer function design using Butterworth, Chebyshev, Inverse Chebyshev, Cauer and Thompson approximations.
- Advanced polynomial manipulation routines, including partial and continued fraction expansions.
- Synthesis of doubly terminated ladder prototypes for lowpass, highpass, bandpass and band elimination filters. This feature replaces the need for using tables.
- For transfer functions with $j\omega$-axis zeros, many circuit realizations can be realized.
- Step-by-step synthesis to see the synthesis process, not just an end result.
- Built in Monte Carlo simulation with graphical visualization for design verification. The Monte Carlo verification also allows the introduction of non-ideal elements.
- Automatic PSpice netlist generation.

In the latter option, the PSpice output file is displayed as an aid to the user in correcting any problems. The output options are the usual ones provided by PSpice, namely ac analysis, dc analysis, transient analysis, and Fourier analysis. An option is provided for printing a copy of the output results. Users of FILTER will find LADDER's user interface familiar. Additionally, many of the transfer function design and testing routines and graphics, found in FILTER, are also included in LADDER.

Technical Data: The program is written in Turbo Pascal 7.0 and is distributed as an EXE file which may be fun on an IBM (or compatible) personal computer using EGA, VGA and Hercules graphics adapters.

Licensing: The program is copyrighted. It may be freely distributed by individuals so long as not charge is assessed. All other rights are reserved.

Cost: The program is available from Dr. L.P. Huelsman, Department of Electrical and Computer Engineering, University of Arizona, Tucson, Arizona 85721, for a shipping and handling charge of four dollars ($4.00) U.S. funds in the continental U.S.A. Outside the U.S.A., the charge is $6.00 (U.S. funds drawn on a U.S. bank). Checks should be made payable to the University of Arizona.

As an example of the use of LADDER, consider an Inverse Chebyshev Bandpass filter. Using options common to FILTER, the desired transfer function is designed. Selection of the menu LADDER starts the synthesis process. The first menu provides for specifying circuit parameters:

LADDER RESISTANCES

Input resistance in ohms	10
Output resistance in ohms	10
1/Q for inductor Q=L/R	0
1/Q for capacitor Q=1/RC	0
Minimum inductor-1 or capacitor-0 circuits	0
Press Esc when done	

Once the desired data is specified, the synthesis is completed, and the Ladder menu appears:

LADDER

1 - Display the data
2 - Draw the circuit
3 - PSpice parameter setting
4 - Generate the pspice file
5 - Manually arrange zeros
6 - Re-synthesize circuit
7 - Run Monte Carlo simulation
8 - Make new Monte Carlo array
9 - Step by step synthesis
0 - Standard values
- Quit

If the user selects option 2 (draw the circuit), LADDER will display a labeled circuit diagram with element values (Fig. 1). Finally, the design may be tested using option 7 (Monte Carlo simulation). A PSpice simulation of the circuit shown in Fig. 1 is shown in Fig. 2.

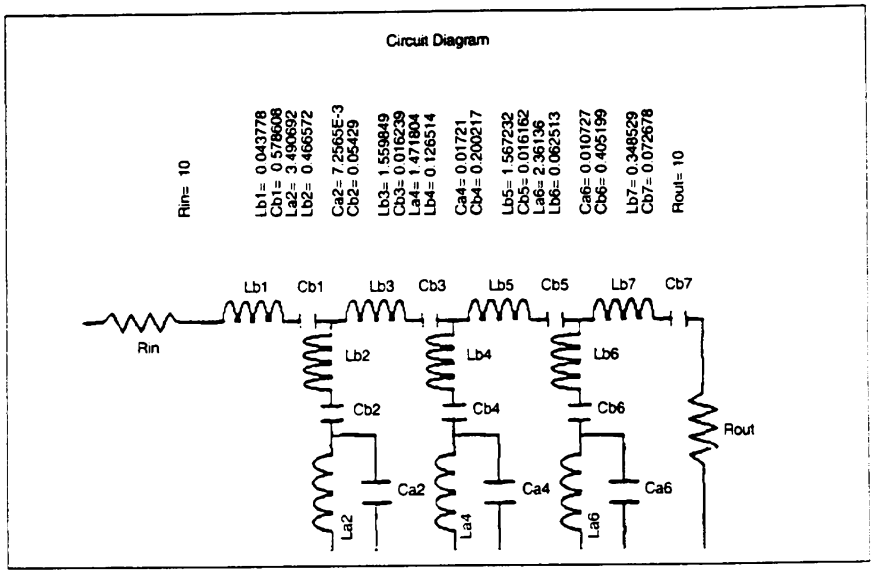

1. Minimum capacitor ladder network drawn by LADDER.

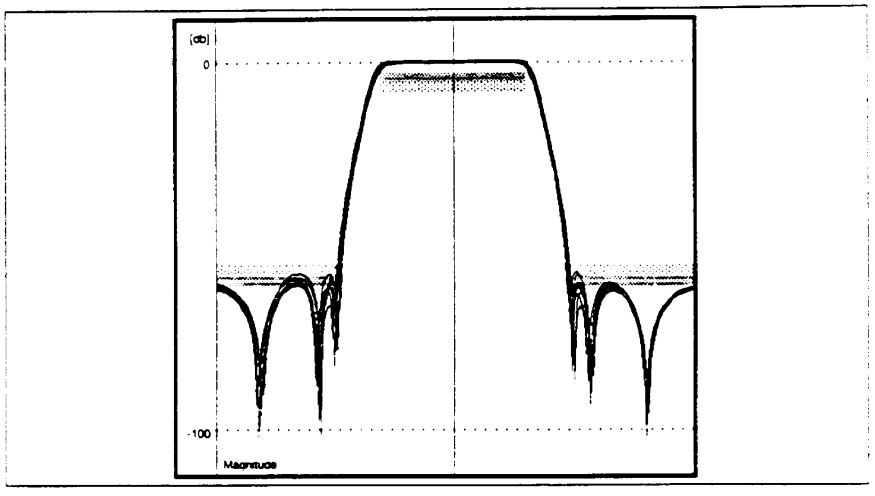

2. Monte Carlo simulation of the circuit in Fig. 1.

I close this column, as always, by inviting you, the reader, to participate. Send me your programs for review and let me hear from you regarding any ideas you may have for increasing PC usage in the academic and industrial sections of the electrical engineering community.

CD

Warning: Photonics Devices Are Not EMI-Proof!

A recent study by Georgia Tech scientists suggests that one frequently touted advantage of photonic vs. electronic devices—immunity to electromagnetic interference— may be overstated and misunderstood. The weak link in the chain stems from the fact that light beams in photonic systems typically are modulated with electrical signals. Thus, the electronic interface provides a way for electromagnetic energy to enter the system, creating potentially serious performance problems. The researchers tested a variety of photonic devices to determine their susceptibility to interference. Problems varied from heating of optical waveguides in an electro-optic system, which caused a change in the waveguide's refractive index, to a spreading of the optical signal in acousto-optic detectors, causing possible interference in adjacent detectors. The Georgia Tech work was described at the "Progress in Electromagnetic Research Symposium" at the Jet Propulsion Laboratory in July.